NOTICE

*Please make sure that you heve all parts indicited and they are in good condition before you begin assembly of this item. Refer to part list and hardware list below for guidence.
*This item should be assembled on a soft surface to prevent scratching the finish during assembly.
*This item may require periodic tightenning.
*If you are having difficulty, our friendly Customer Care team is always here to help. Please email customersupport@safavieh.com.

PREPARATION

* Before beginnning assembly of product, make sure all parts are present. Compare parts with part contents list and hardware contents list.
* If any part is missing or damged,do not attempt to assemble the product.
* Estimated Assembly Time: 10 minutes.
*Tools Required for Assembly (included): Allen Key

CARE AND MAINTENANCE

Store outdoor furniture indoors or cover well when not in use. Dust regularly with small brush or vacuum. Spills should be taken care of immediately before they harden or stain with a slightly damped sponge.

WOODCARE

Adhesive felt pads should always be applied to areas of furniture which make direct contact with flooring, said application will prevent damage to the furniture and or surfaces on which the furniture lies. Objects placed on articles of furniture should rest on nonabrasive material as to prevent damage to the wood finish. Objects whose composition consists of plastic and rubber are known to discolor and damage the wood surfaces on which they rest. Wipe up

Cleaning should be done with a soft lint free cotton cloth dampened with water or furniture polish. On highly used surfaces we recommend applying a quality paste wax which should be used on a regular basis to provide additional protection from scratches and spills. How often you apply the wax depends on how much wear the furniture receives.

SAFAVIEH
COUTURE

Model# CPT1009A
Product Dimensions:32" W x 36.2" D x 30.4" H

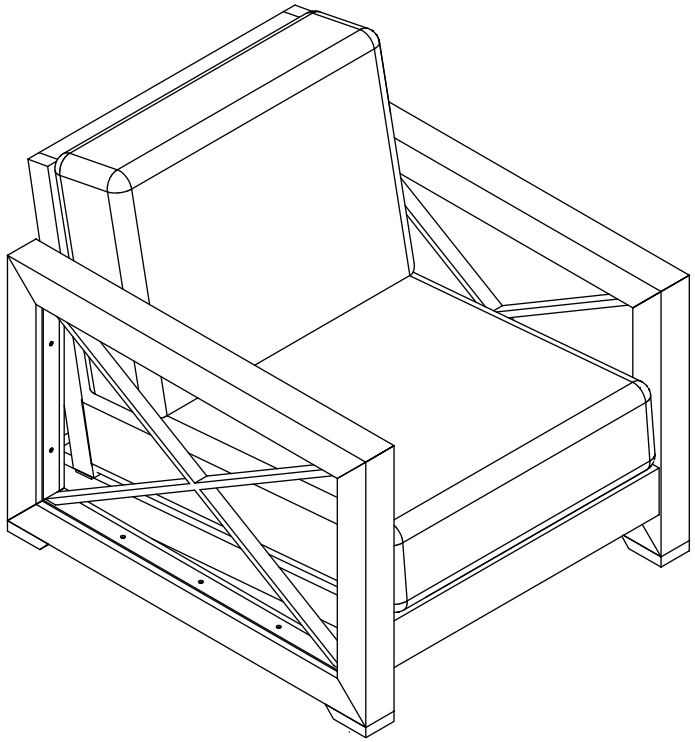

WARNING

Weight Capacity : 200 **Ibs**
Warning : Do not stand on table
Warning : Do not over torque bolts / screws

PREPARATION

*Before beginning assembly of product, make sure all parts are present. Compare parts with package contents list and hardware contents list.
*If any part is missing or damaged, do not attempt to assemble the product.
* Estimated Assembly Time : 10 minutes.
* Tools Requied for Assembly (included): Allen Key
* If you are having dificulty, our friendly Customer care team is always here to help. Please email **customersupport@safavieh.com**

Part List and Hardware List

PIECE	DESCRIPTION	PICTURE	QUANTITY
A	Frame back		1X
B	Frame Seat		1X
C	Leg Side Frame		2X
CSH1	Cushion Back		1X
CSH2	Cushion Seat	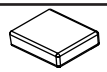	1X
HW1	Allen Screw: M7 x0.5 x90 mm		2X
HW2	Allen Bolt: M8x0.5x45 mm		6X
HW3	Allen key	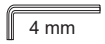	2X

PREPARATION

*Before beginning assembly of product, make sure all parts are present. Compare parts with package contents list and hardware contents list.
*If any part is missing or damaged, do not attempt to assemble the product.
* Estimated Assembly Time : 10 minutes.
* Tools Requied for Assembly (included): Allen Key
* If you are having dificulty, our friendly Customer care team is always here to help. Please email **customersupport@safavieh.com**

1

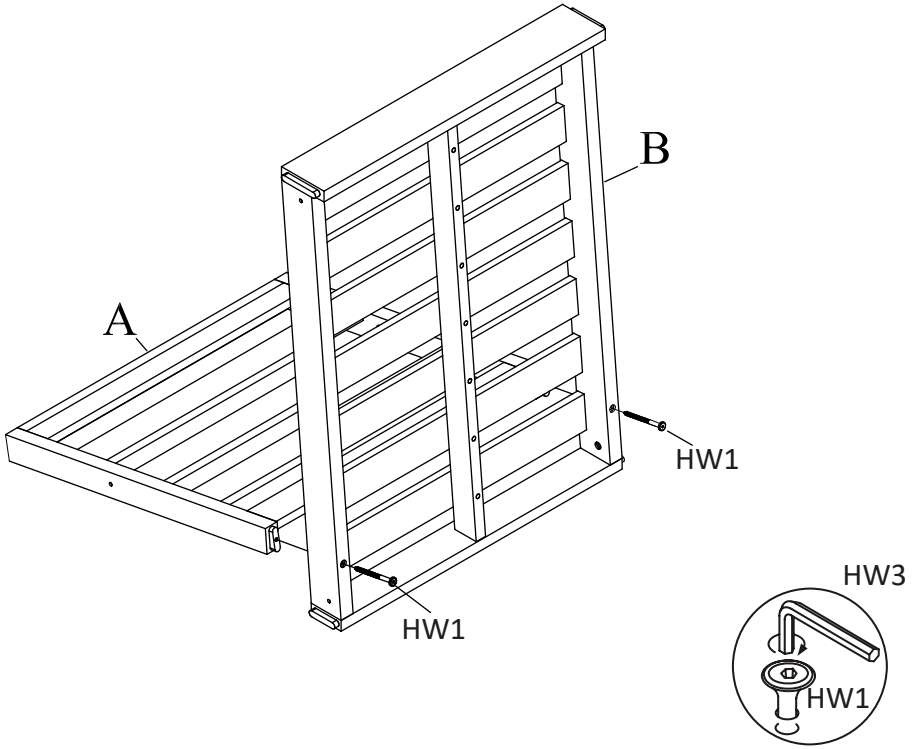

Step 1

Attach Back Frame (A) to Seat Frame (B). Use Screw (HW1) tighten with Allen Key (HW3).

2

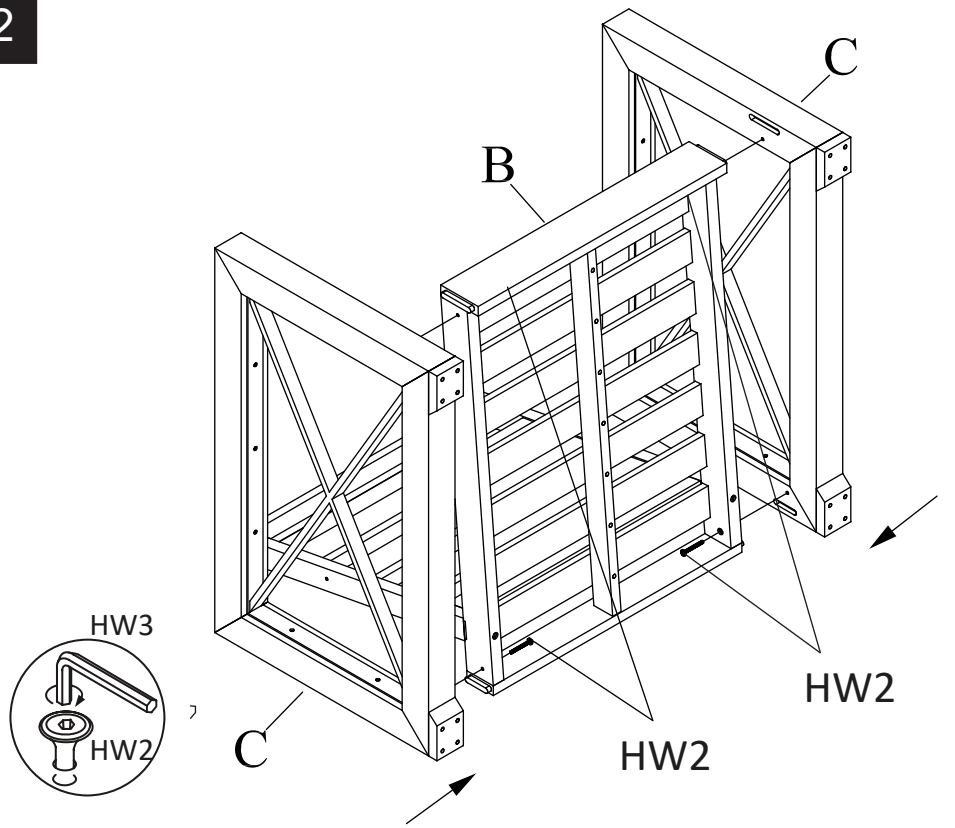

Step 2

Insert Leg Side Frame (C) to Seat Frame (B). Use Bolt (HW2) tighten with Allen Key (HW3).

PREPARATION

*Before beginning assembly of product, make sure all parts are present. Compare parts with package contents list and hardware contents list.
*If any part is missing or damaged, do not attempt to assemble the product.
* Estimated Assembly Time : 10 minutes.
* Tools Requied for Assembly (included): Allen Key
* If you are having dificulty, our friendly Customer care team is always here to help. Please email **customersupport@safavieh.com**

3

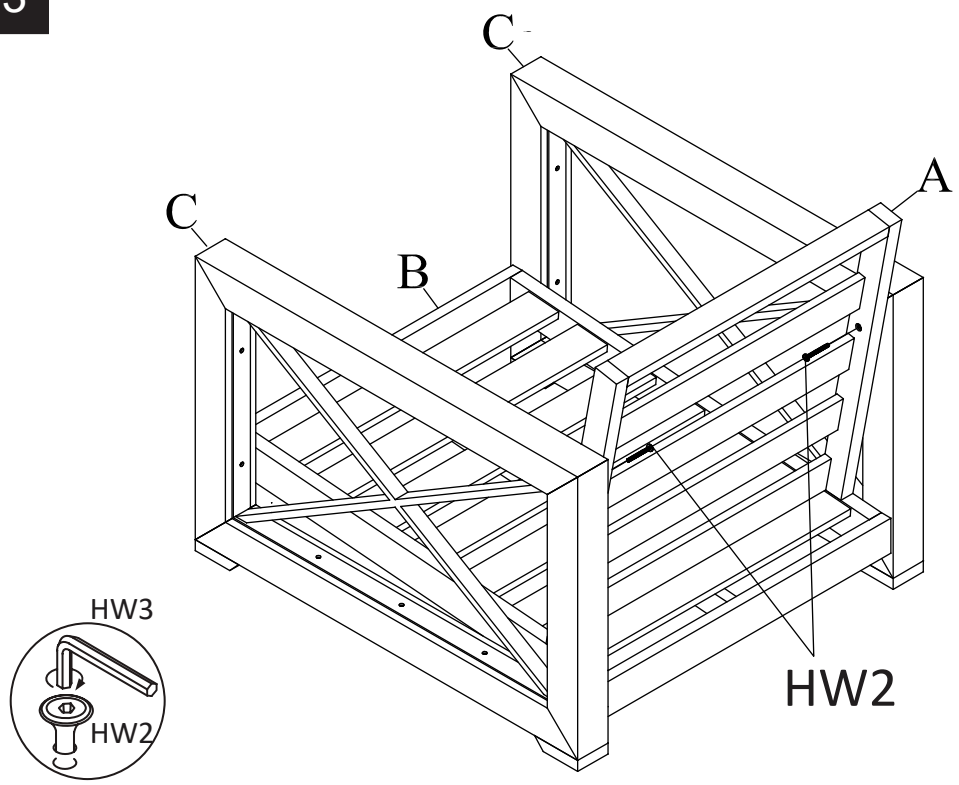

Step 3
Continue using both (HW2) to back frame (A) tighten with Allen Key(HW3).

4

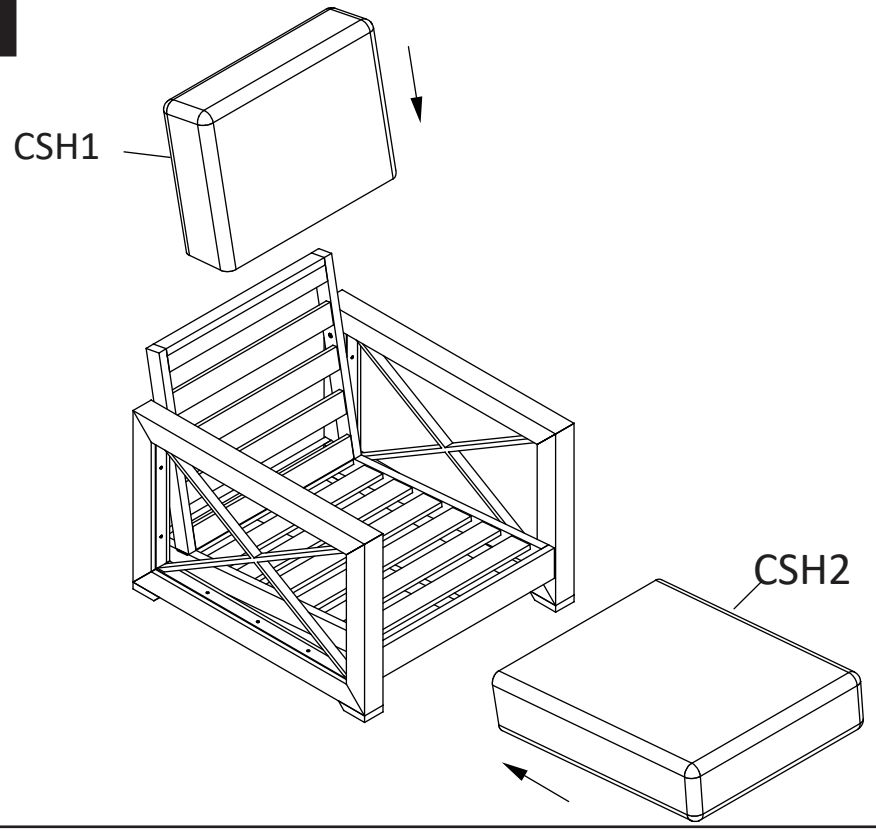

Step 4
Put Back Cushion (CSH1) and Seat Cushion (CSH2) on the Chair.
The Chair is ready to be used.

PREPARATION

*Before beginning assembly of product, make sure all parts are present. Compare parts with package contents list and hardware contents list.
*If any part is missing or damaged, do not attempt to assemble the product.
* Estimated Assembly Time : 10 minutes.
* Tools Requied for Assembly (included): Allen Key
* If you are having dificulty, our friendly Customer care team is always here to help. Please email **customersupport@safavieh.com**

5

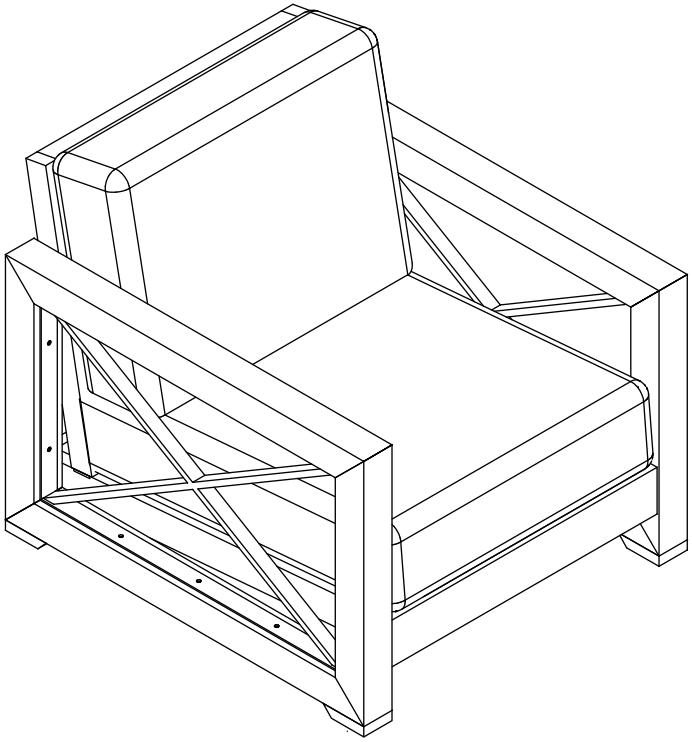

Step 5 Caution: This Chair can only be used on a flat, level surface