NOTICE

*Please make sure that you heve all parts indicited and they are in good condition before you begin assembly of this item. Refer to part list and hardware list below for guidence.
*This item should be assembled on a soft surface to prevent scratching the finish during assembly.
*This item may require periodic tightenning.
*If you are having difficulty, our friendly Customer Care team is always here to help. Please email **customersupport@safavieh.com.**

PREPARATION

* Before beginnning assembly of product, make sure all parts are present. Compare parts with part contents list and hardware contents list.
* If any part is missing or damged,do not attempt to assemble the product.
* Estimated Assembly Time: 10 minutes.
*Tools Required for Assembly (included): Allen Key

CARE AND MAINTENANCE

Insert Care and Maintenance here

SAFAVIEH COUTURE

Model# CPT1041A
Product Dimensions: 79.92" W x 29.92" D x 28.34" H

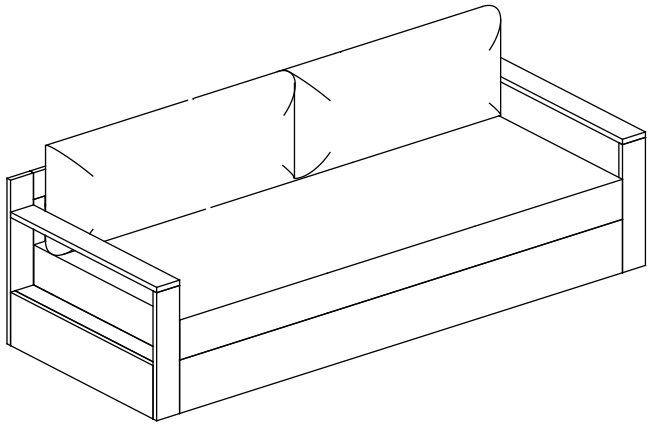

WARNING

Weight Capacity : 700 **lbs**
Warning : Do not stand on chair
Warning : Do not over torque bolts / screws

Part List and Hardware List

PIECE	DESCRIPTION	PICTURE	QUANTITY
A	Frame back		1X
B	Frame Seat		1X
C	Frame Leg		2X
D	Cross Leg		1X
E	Extra seat leg		2X
CSH1	Seat Cushion	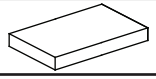	1X
CSH2	Back Cushion		2X
HW1	Allen Bolt: M6x0.5x40 mm	 M6x40	8X

HW2	Screw: M6x0.5x80 mm	 M6x80	2X
HW3	Allen Bolt: M6x0.5x35 mm	 M6x35	2X
HW4	Allen key	 LG4	2X

PREPARATION

*Before beginning assembly of product, make sure all parts are present. Compare parts with package contents list and hardware contents list.
*If any part is missing or damaged, do not attempt to assemble the product.
* Estimated Assembly Time : 10 minutes.
* Tools Requied for Assembly (included): Allen Key
* If you are having dificulty, our friendly Customer care team is always here to help. Please email **customersupport@safavieh.com**

1

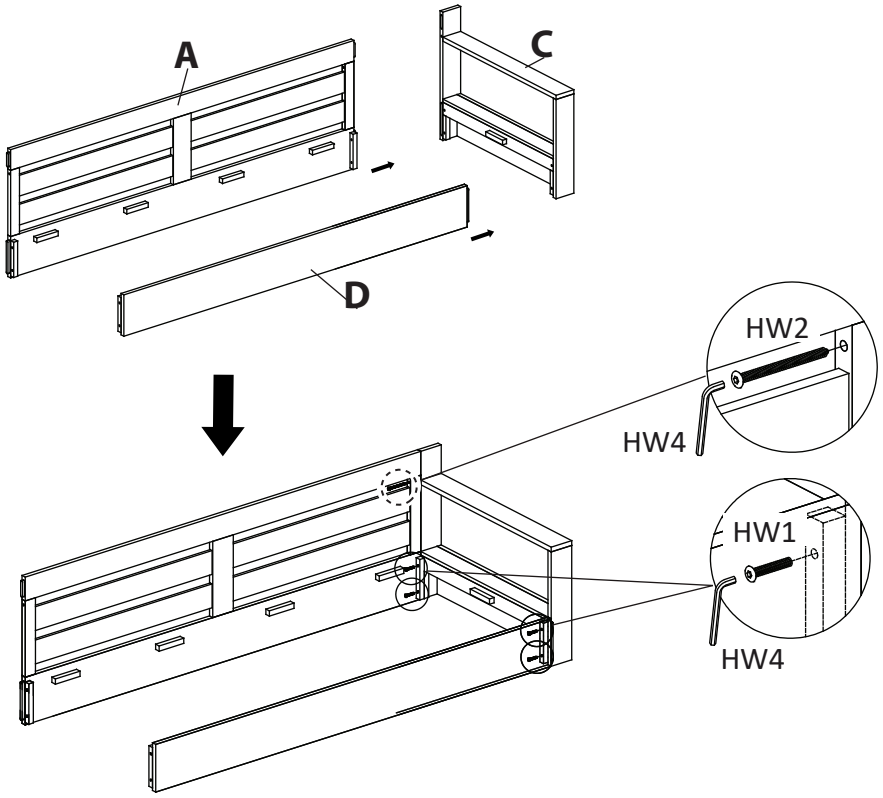

Step 1
Attach Back Frame (A) to Frame Leg (C), use Screws (G) , Bolts (F) tighten with Allen Key (K)
Attach Cross Leg (D) to Frame Leg (C), use Bolts (F) tighten with Allen Key (K)

2

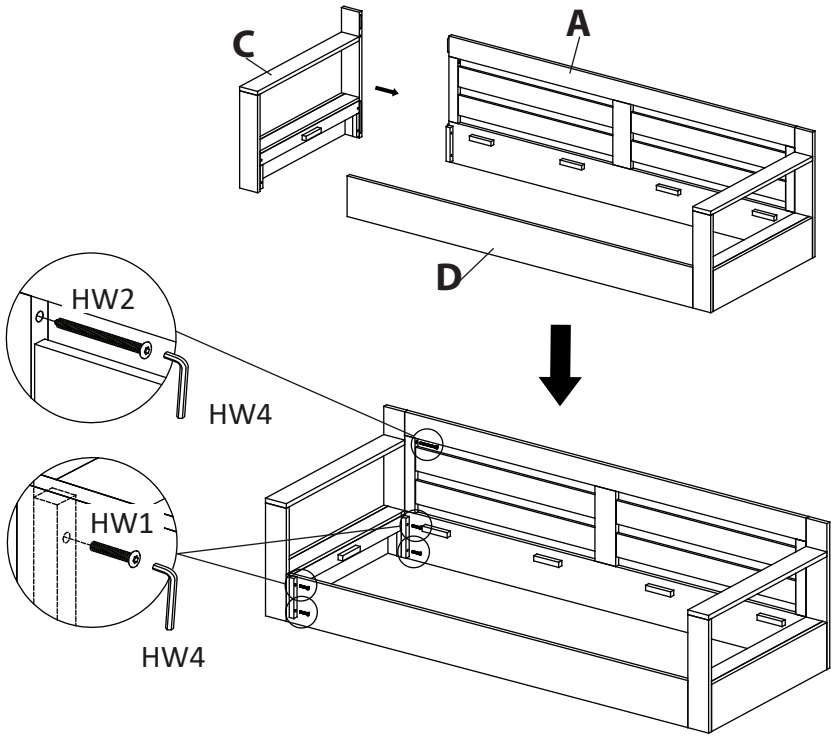

Step 2
Attach Frame Leg (C) to Back Frame (A), use Screws (HW2) , Bolts (HW1) tighten with Allen Key (HW4)
Attach Frame Leg (D) to Cross Leg (C), use Bolts (HW1) tighten with Allen Key (HW4)

PREPARATION

*Before beginning assembly of product, make sure all parts are present. Compare parts with package contents list and hardware contents list.
*If any part is missing or damaged, do not attempt to assemble the product.
* Estimated Assembly Time : 10 minutes.
* Tools Requied for Assembly (included): Allen Key
* If you are having dificulty, our friendly Customer care team is always here to help. Please email **customersupport@safavieh.com**

3

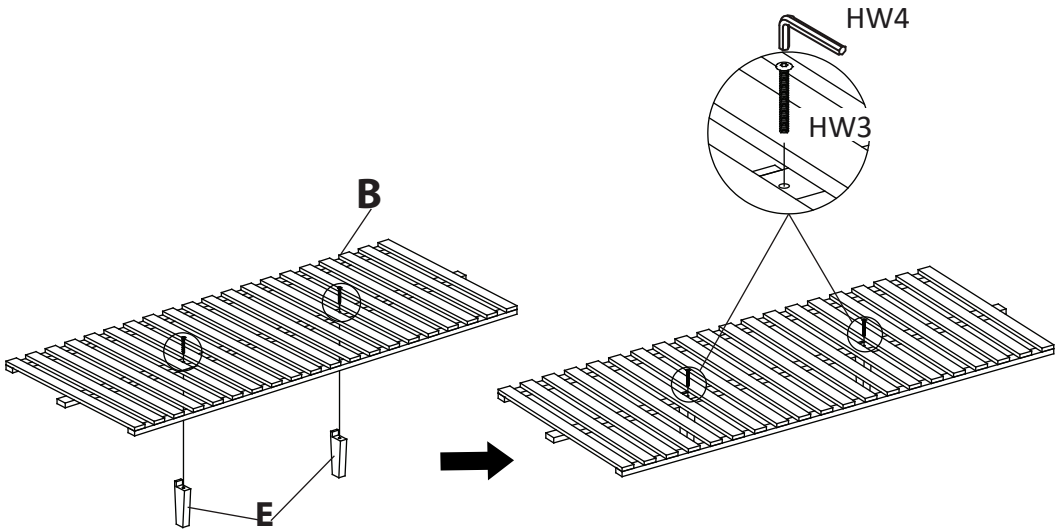

Step 3
Attach Extra seat leg (E) to Frame Seat (B),use Bolt (HW3) tighten with Allen Key (HW4)

4

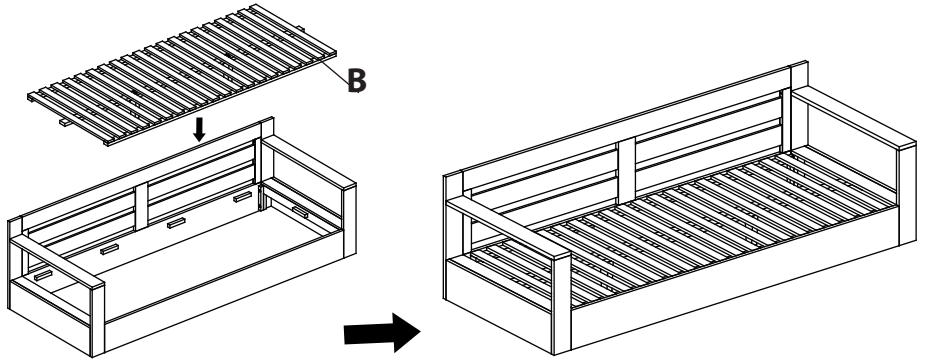

Step 4
Attach the assembled frame in step 3 to the assembled frame in step 2

PREPARATION

*Before beginning assembly of product, make sure all parts are present. Compare parts with package contents list and hardware contents list.
*If any part is missing or damaged, do not attempt to assemble the product.
* Estimated Assembly Time : 10 minutes.
* Tools Requied for Assembly (included): Allen Key
* If you are having dificulty, our friendly Customer care team is always here to help. Please email **customersupport@safavieh.com**

5

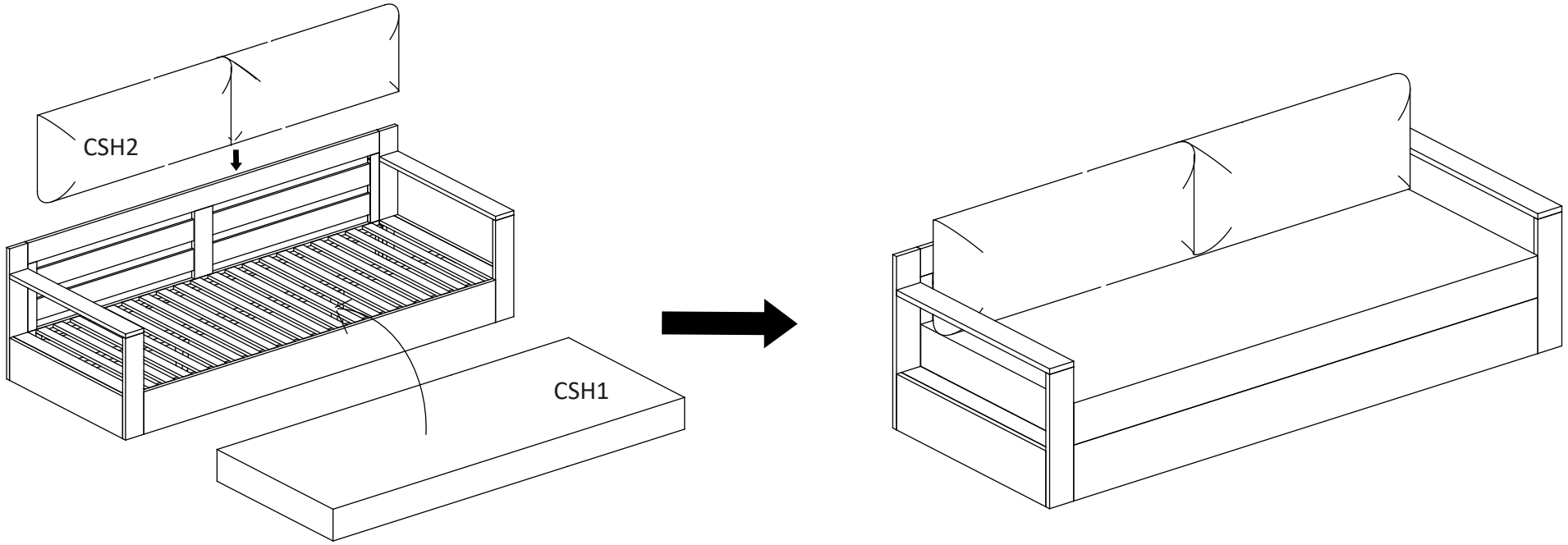

Step 5
Attach Ensure all screws, bolts are fully locked into position . Place Seat Cushion (CSH1), Back Cushion (CSH2) into the Chair.
The Chair is ready to be used