TRINIDAD BRAZILIAN TEAK PATIO CHAIR

DESIGN # CPT1058

Assembly Instructions

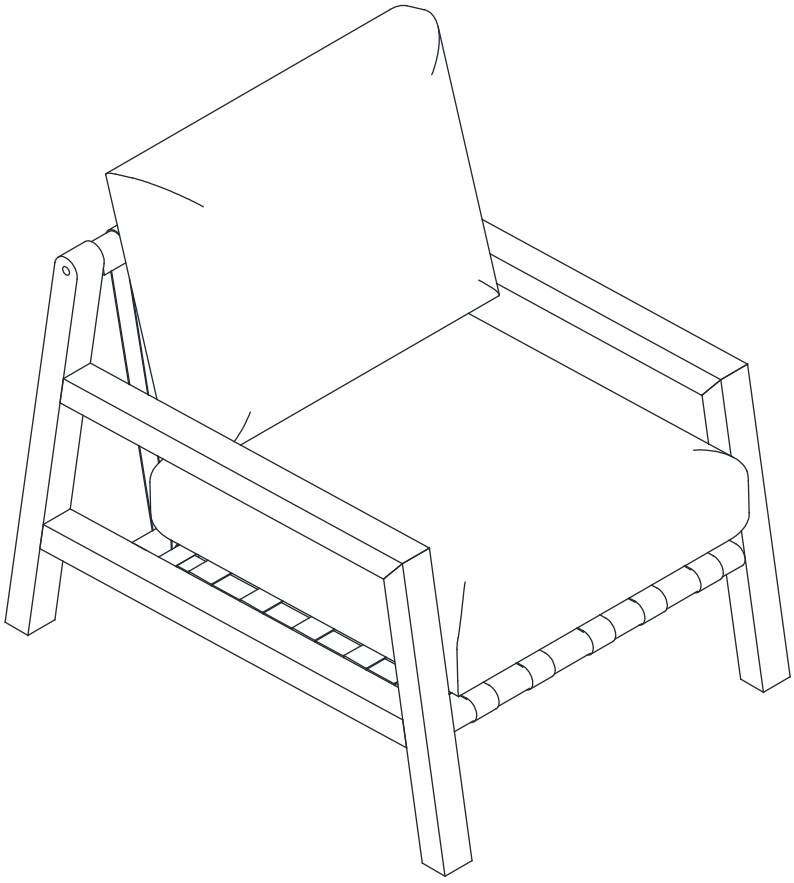

SAFAVIEH COUTURE

Thanks for bringing Safavieh Couture into your home

Everything We make is incredily simole to set up, including your new dinning chair. You won't need any additional tools.

Parts & hardware

A x 1
Frame back



CSH 1 x 1
Seat Cushion

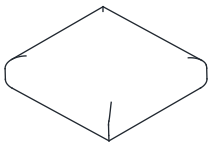

B x 1
Frame Seat

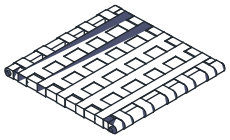

CSH 2 x 1
Back Cushion

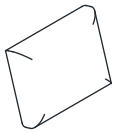

C x 1
Frame Leg 1

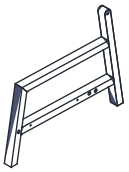

D x 1
Frame Leg 2

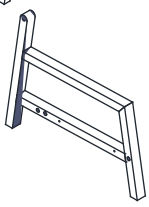

HW1 x 2
Allen Crew: M7x0.5x90 mm



M7x90

HW2 x 4

Allen Bolt: M8x0.5x65 mm



M8x65

HW3 x 1
Allen key



LG4

1

Attach Frame Seat (B) to Frame Leg 1 (C) ,use Bolt (HW2)
tighten with allen key (HW3).

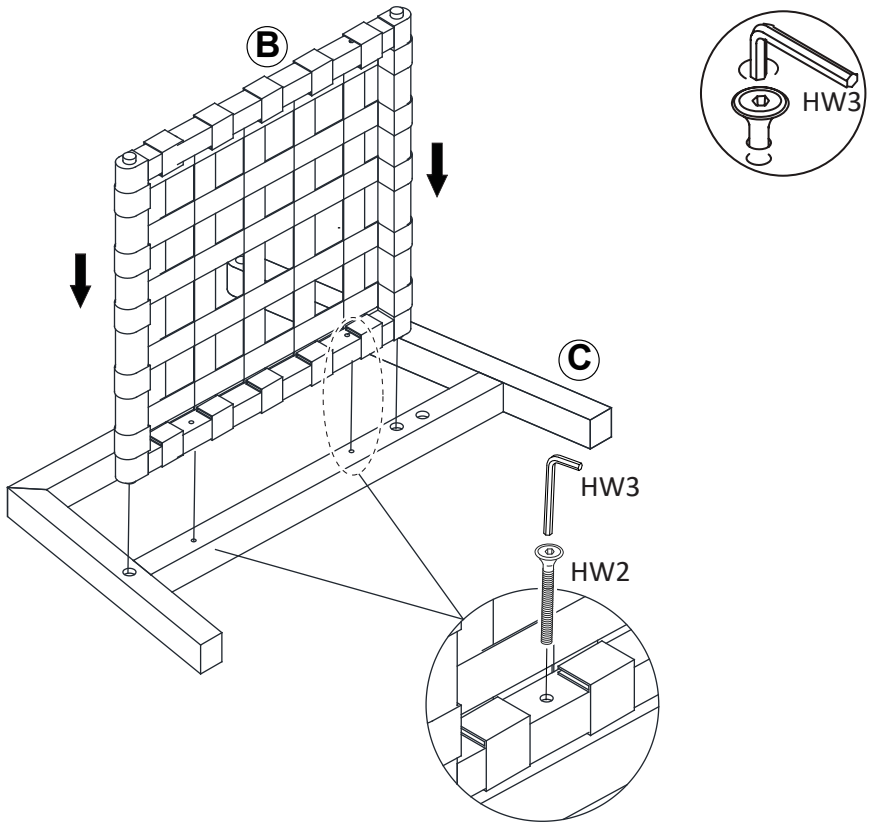

2

Attach Frame Back (A) to Frame Leg 1 (C) ,use Scew (HW1)
tighten with allen key (HW3).

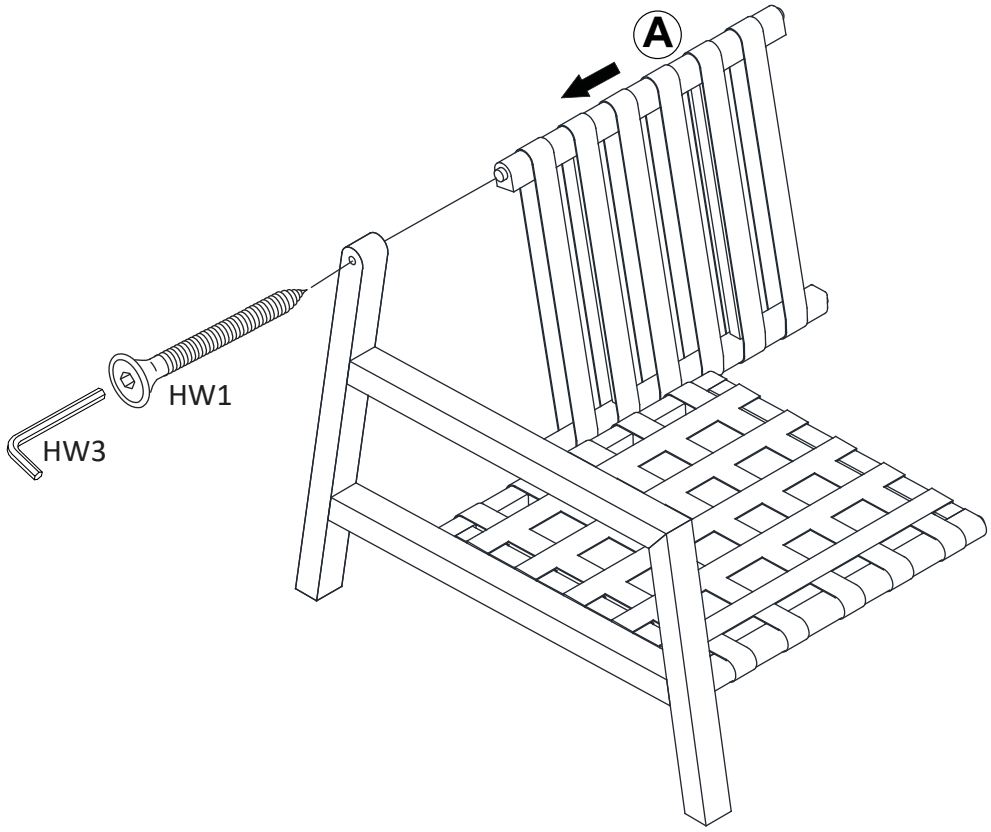

3

Attach Leg 2 (D) to Frame Seat (B) and Frame Back (A)
Use Screw (HW1) and Bolt (HW2) tighten with allen key (HW3).

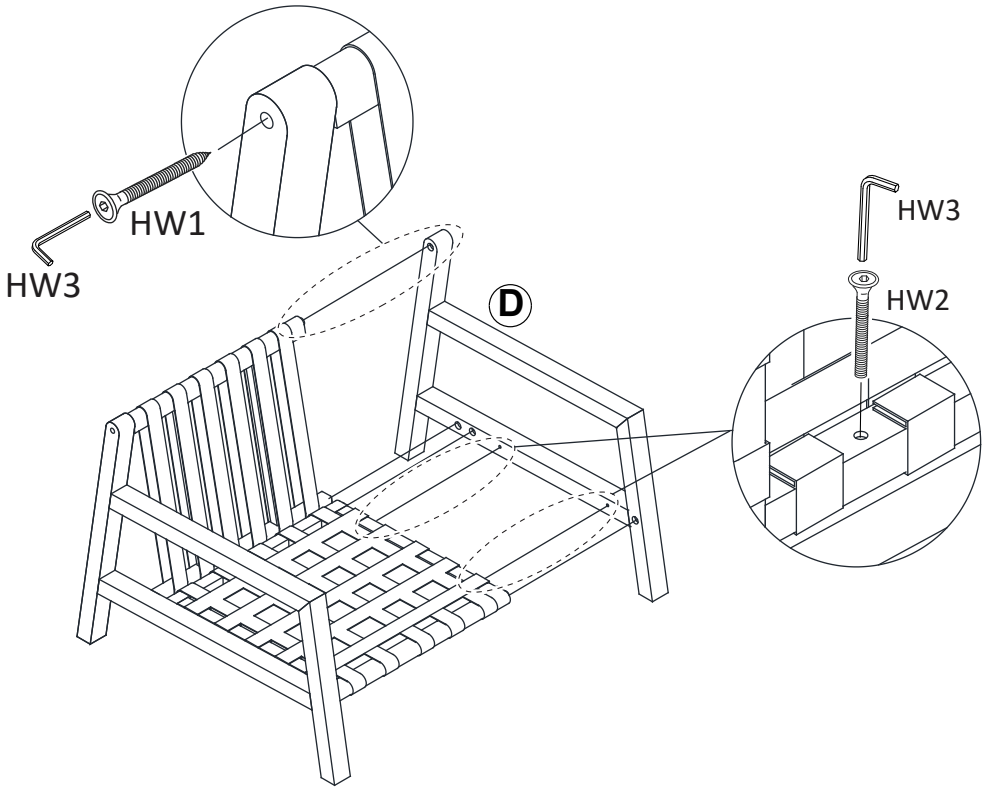

4

Attach Seat cushion (CSH1) and Back cushion (CSH2) in chair .

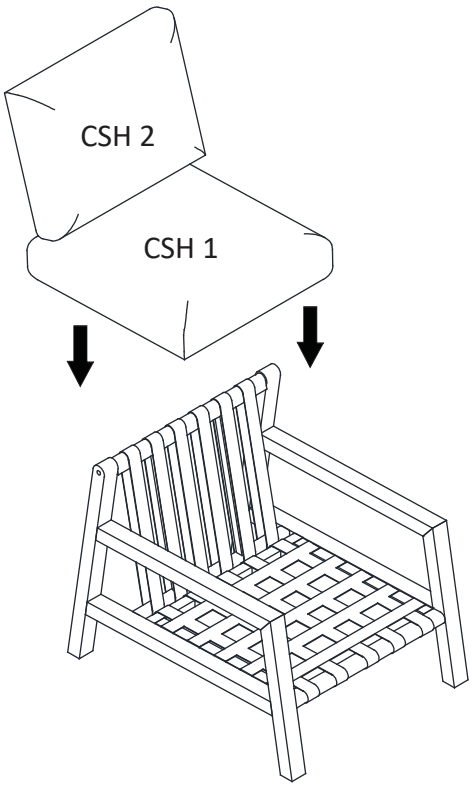

5
Complete.

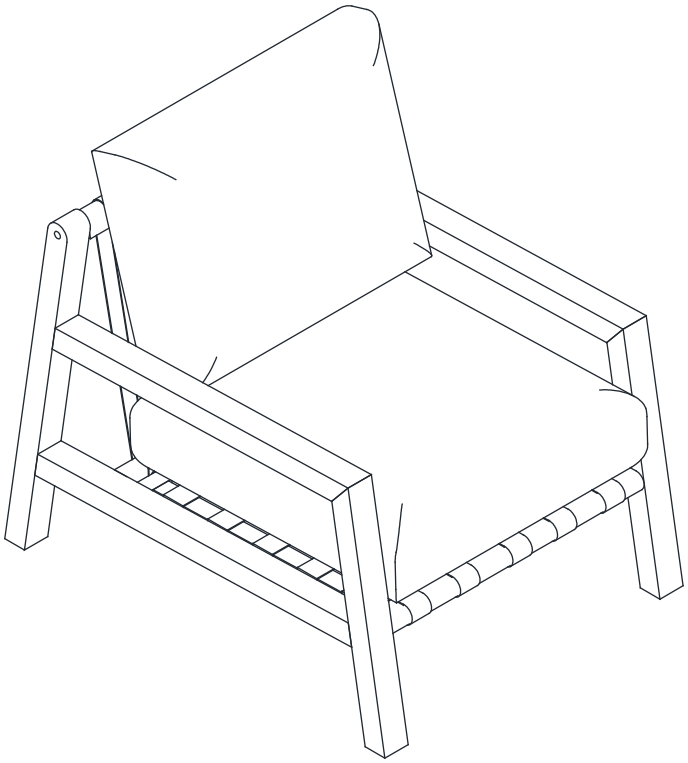

Need help?

Feel free to contact us via email or call
If you have any specfic question!

Contact us:

CS@safavieh.com
866-422-9070