MONTFORD BRAZILIAN TEAK CHAISE LOUNGE

DESIGN # CPT1065

Assembly Instructions

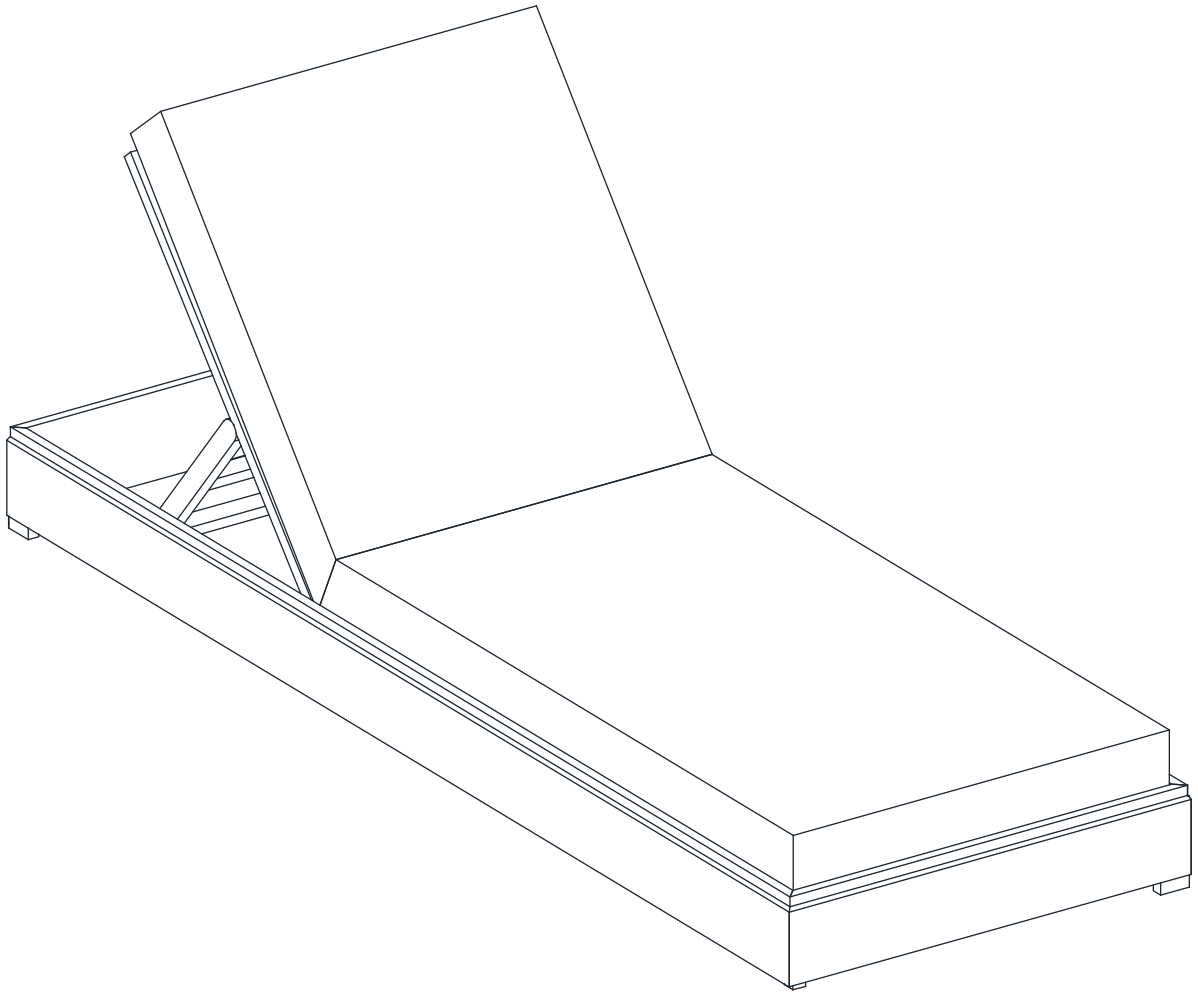

SAFAVIEH COUTURE

Place the chair lounge in the place where you will use it. We'd love to see it – just tag us (we're @safavieh) and use the hashtag #safavieh on Instagram!

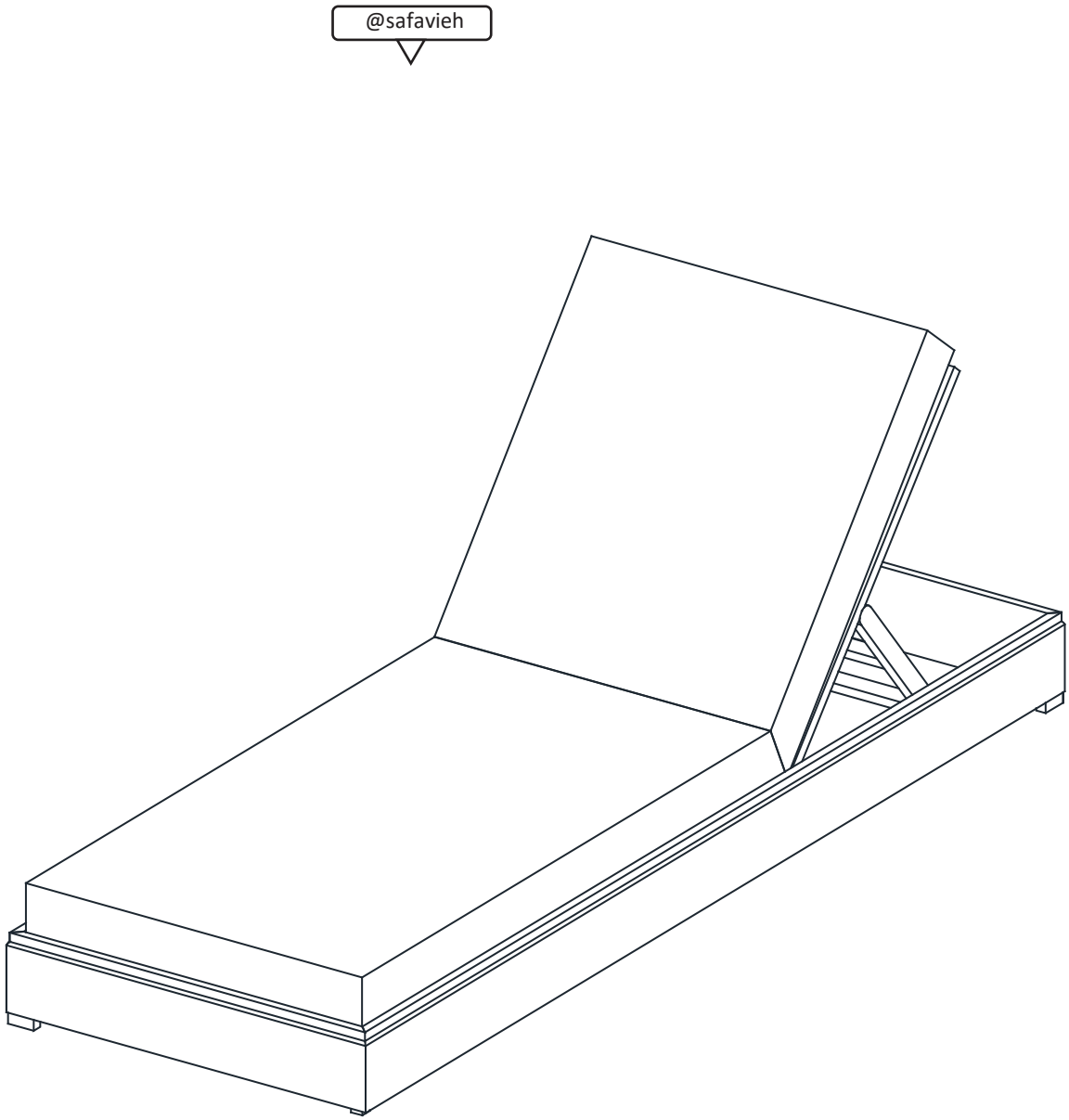

Need help?

Feel free to contact us via email or call
If you have any specfic question!

Contact us:

CS@safavieh.com
866-422-9070