SAINT LUCIA REEDED TEAK WOOD PATIO LOVESEAT

DESIGN # CPT1073

Assembly Instructions

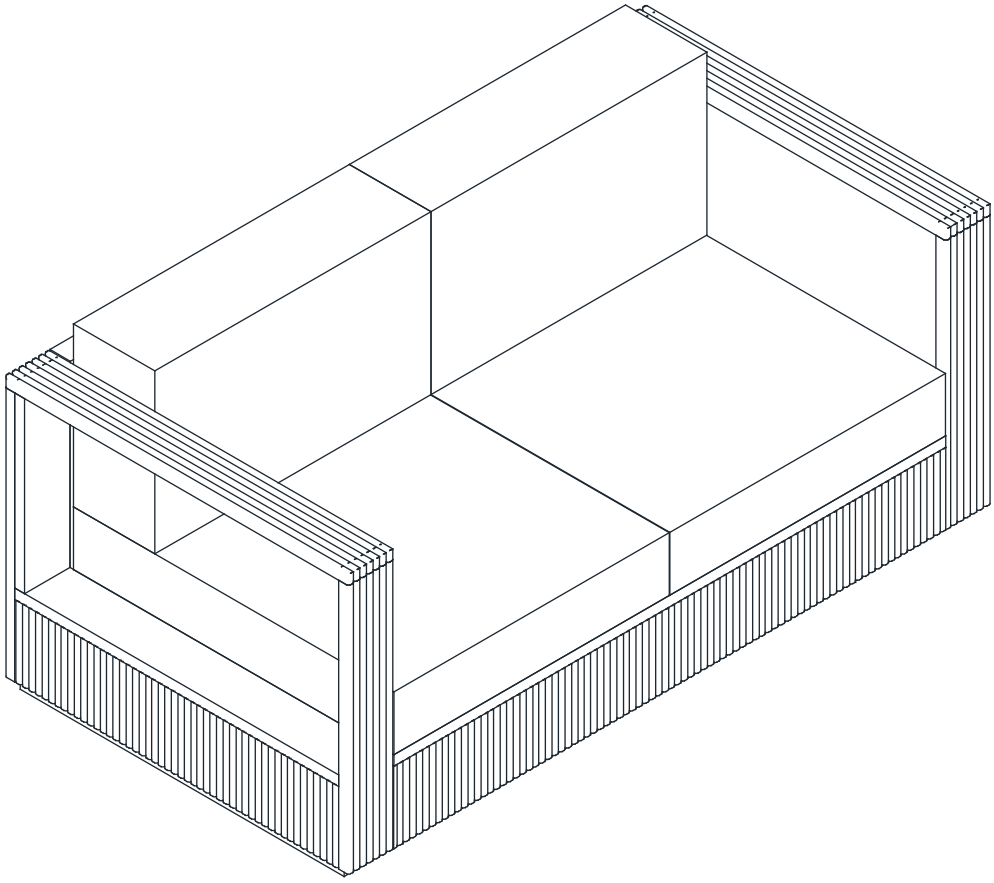

SAFAVIEH
COUTURE

Thanks for bringing Safavieh Couture into Your home

Every thing we make is incredibly simple to set up, including your new loveseat. You won't need any additional tools.

Parts List

A x 1
Right leg Panel

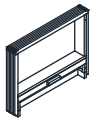

B x 1
Left leg Panel

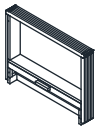

C x 1
Front panel

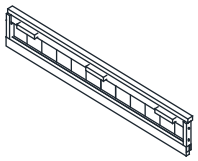

D x 1
Back panel

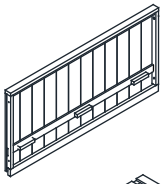

E x 1
Seat panel

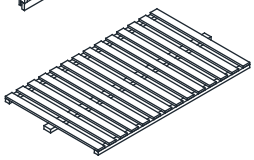

CSH1 x 2
Seat Cushion

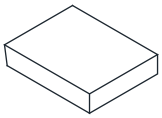

CSH2 x 2
Back Cushion

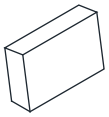

Hardware List

HW1 x 8
Allen Bolt: M6x0.5x35 mm



HW2 x 2
Allen Screw: M6x0.5x35 mm



HW3 x 1
Allen key



1

Attach Front panel (C), and Back panel (D) to Right leg Panel (A) ,use Bolt (HW1) tighten with allen key (HW3).in the spots shown below.

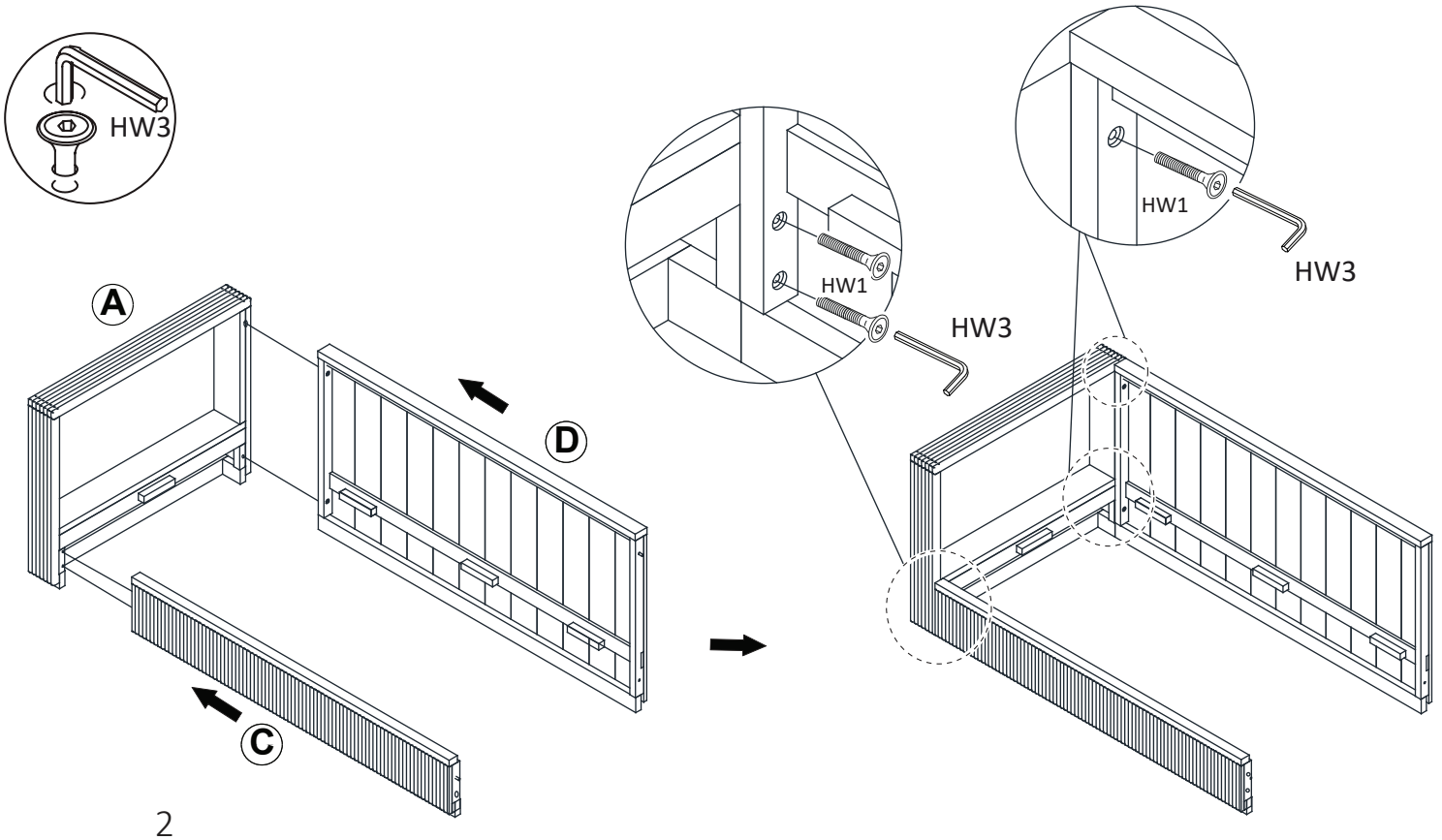

2

Attach Left leg Panel (B) to Front panel (C) and Back panel(D),use Bolt (HW1) tighten with allen key (HW3).in the spots shown below.

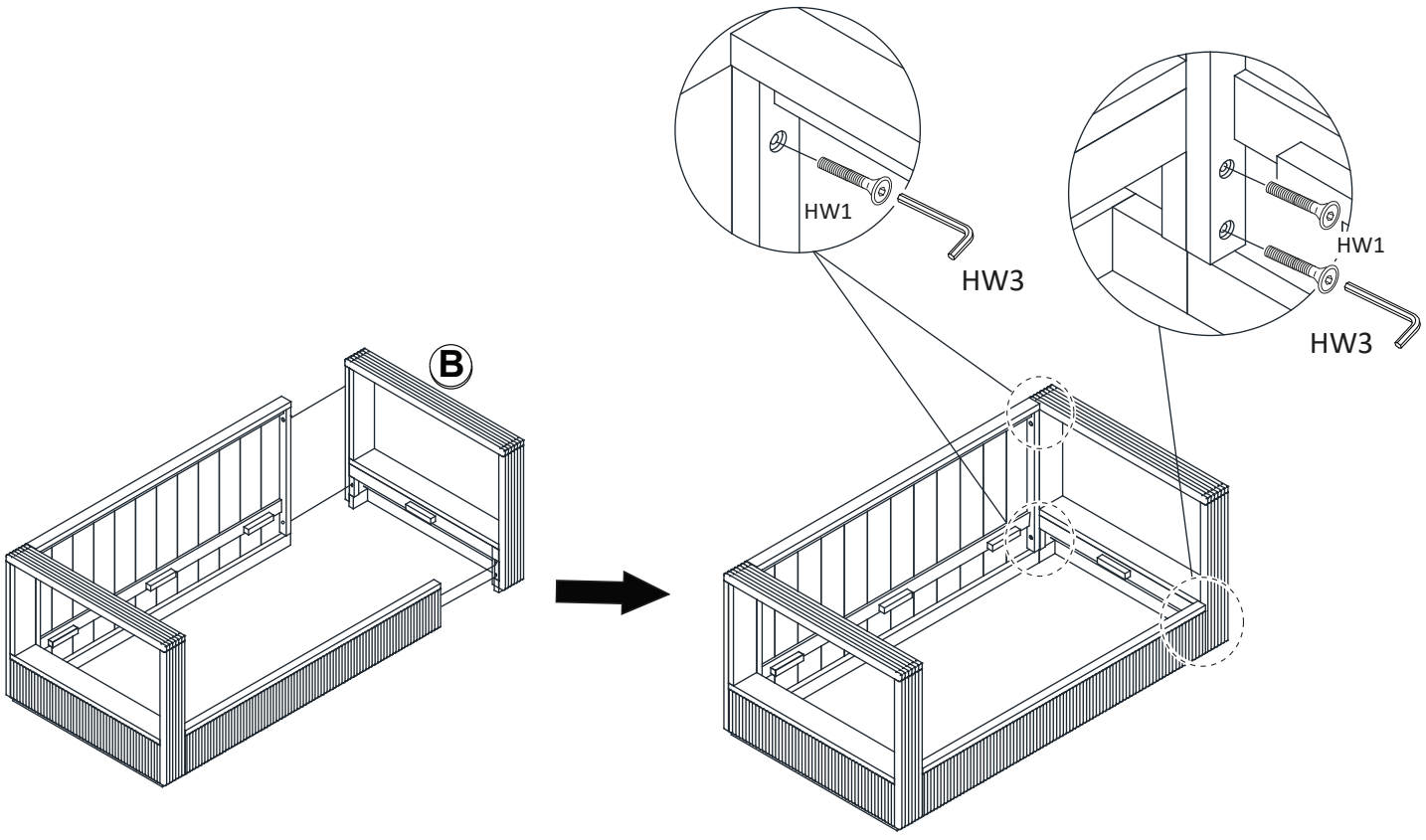

5

Attach Seat panel (E) to ArmChair .Use Screw (HW2) tighten with allen key (HW3).
in the spots shown below.

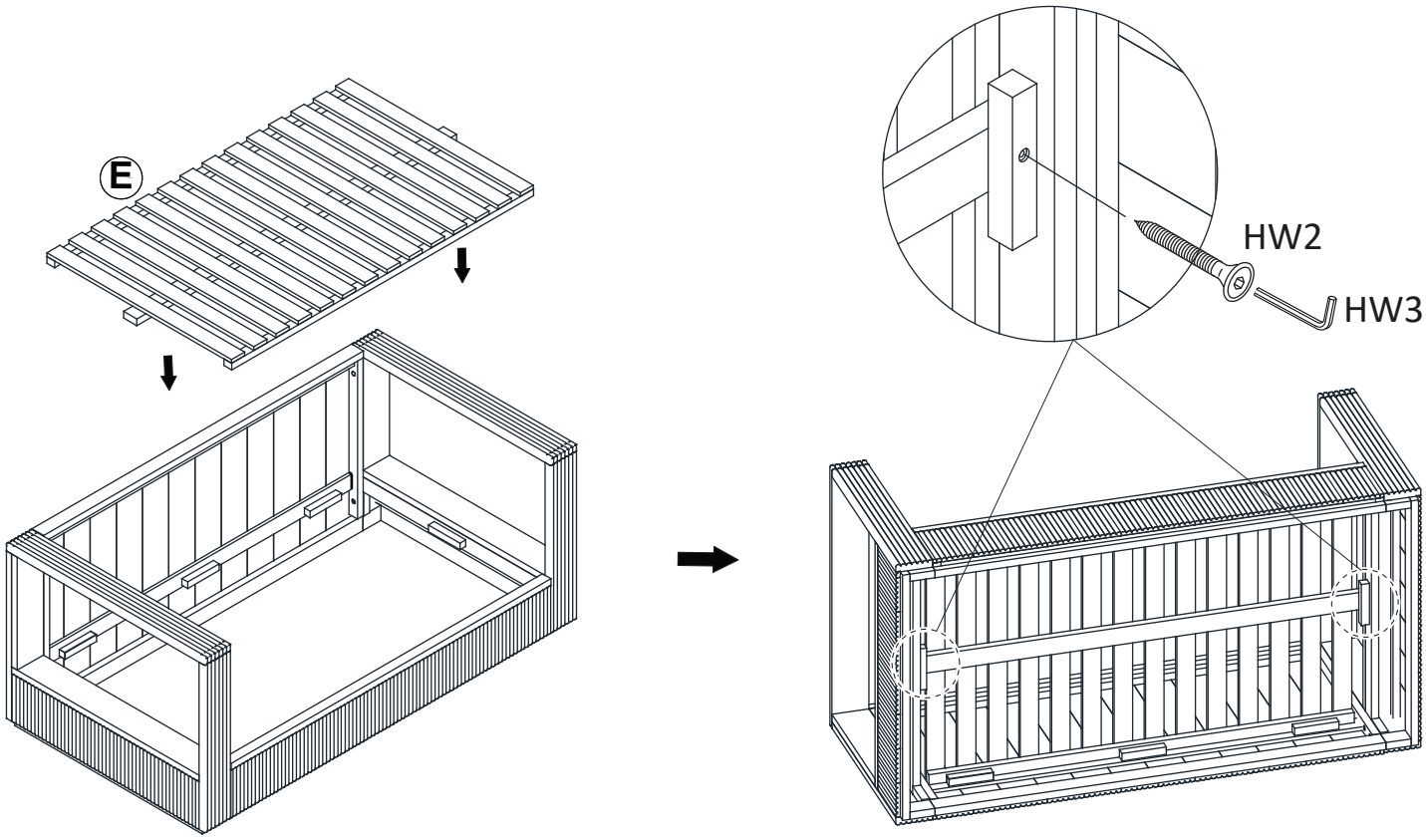

6

Attach Seat Cushion (CSH1) and Back Cushion (CSH2) in Chair.

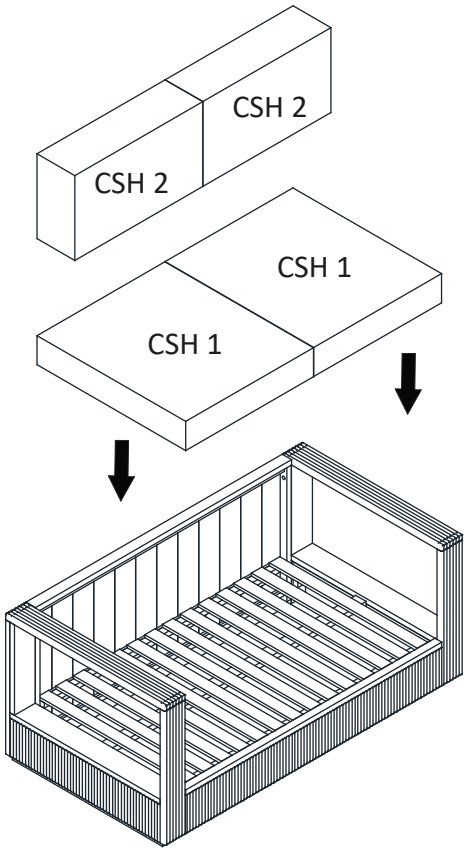

Place the loveseat in the place where you will use it. We'd love to see it – just tag us (we're @safavieh) and use the hashtag #safavieh on Instagram!

@safavieh

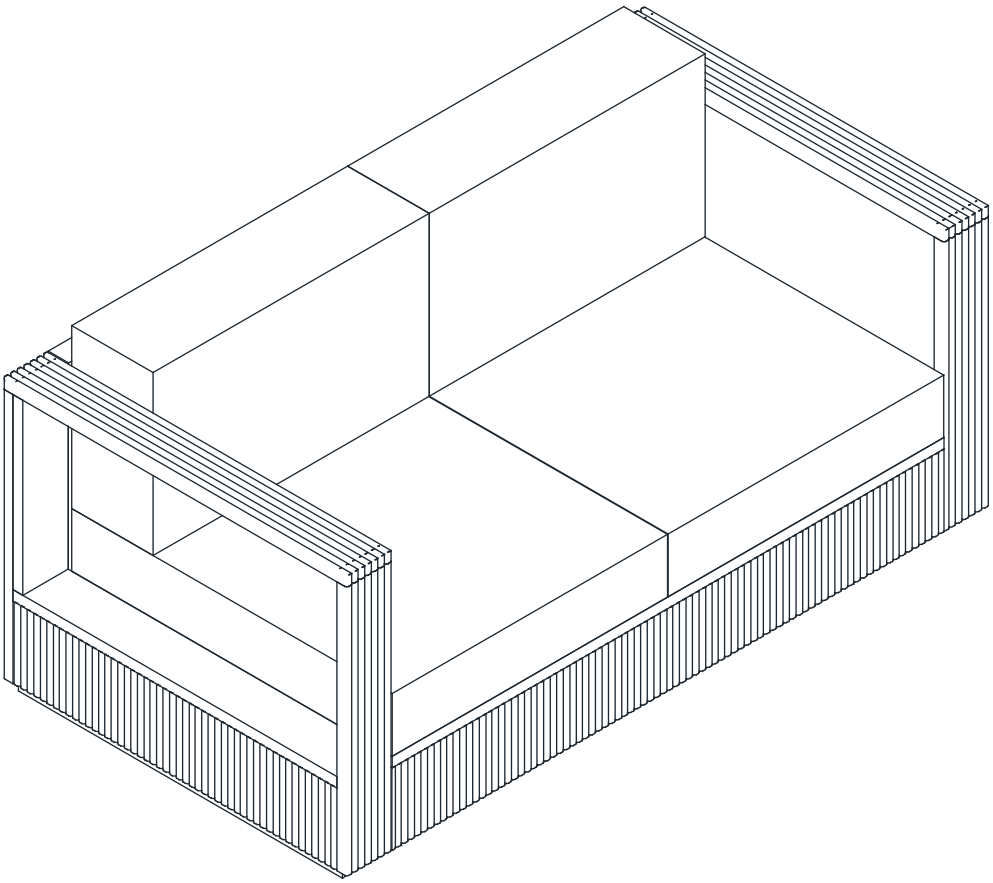

Need help?
Feel free to contact us via email or call
If you have any specfic question!

Contact us:

CS@safavieh.com
866-422-9070