GALE
ARM CHAIR

DESIGN # Item ID : CPT2013A

Assembly Instructions
Product Dimensions : W : 31.7'' X D: 33.7'' X H : 24''

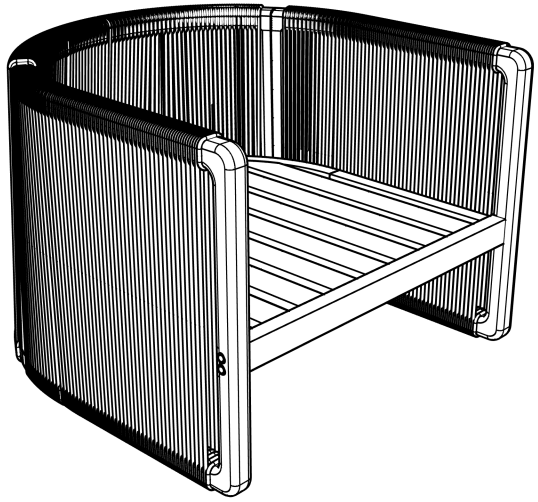

Need help?
Feel free to contact us via email or call
if you have any specific questions!
contact us:
cs@safavieh.com
866-422-9070

SAFAVIEH
COUTURE

Thanks For bringing Safavieh Couture Into your home

Every thing we make is incredibly simple to set up, including your new chair. you won't need any additional tools.

Parts List

A X 1
SIDE PANEL (LEFT)



B X 1
SIDE PANEL (RIGHT)



C X 1
SEAT PANEL

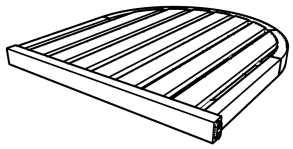

D X 1
BACK PANEL

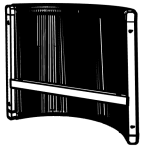

Hardware List

HW1 X 10
JCBC BOLT M6 X 50



HW2 X 1
ALLEN KEY



HW3 X 4
BOLT CAP



1

Attach the side panel (left) (A) to the seat panel (C) with bolt (HW1), do not tighten until completely assembled

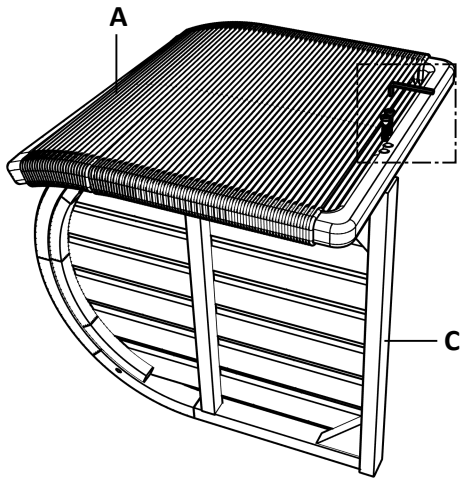

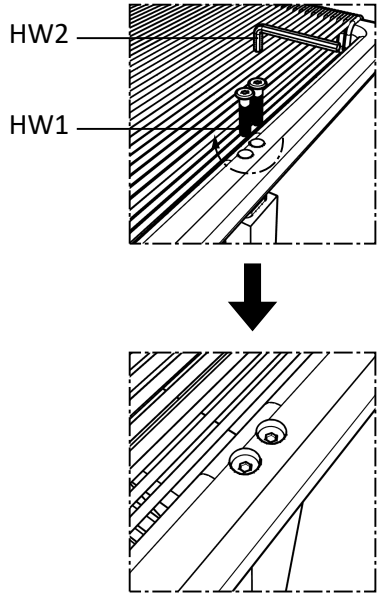

2

Attach the side panel (right) (B) to the seat panel (C) with bolt (HW1), do not tighten until completely assembled

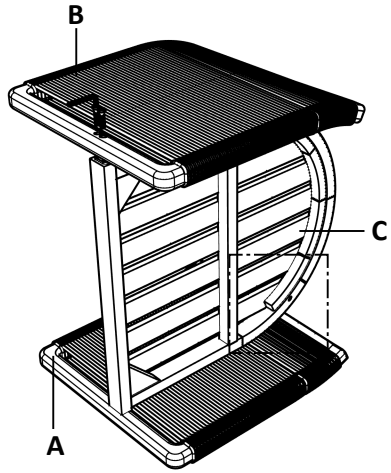

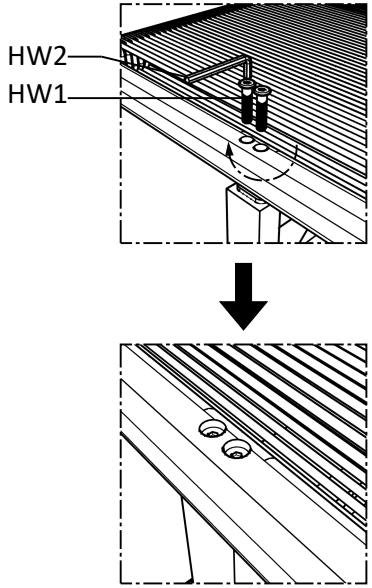

3

Install the back panel (D) between the side panel (A+B) and the bolts (HW1),
2 bolts on the bottom that must be installed.
Do not tighten until it is completely installed

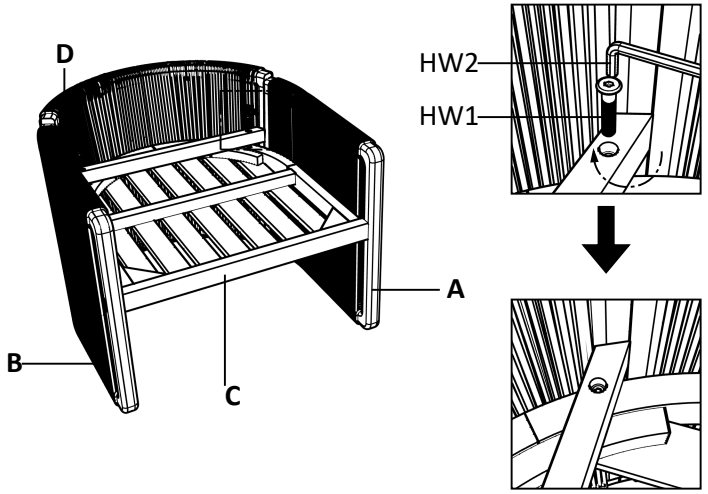

4

Rotate the position, open the webbing slightly on the back close to the post
on the back panel. Install the bolts through the holes at the top and bottom
from the post, right and left sides
Do not tighten until fully installed

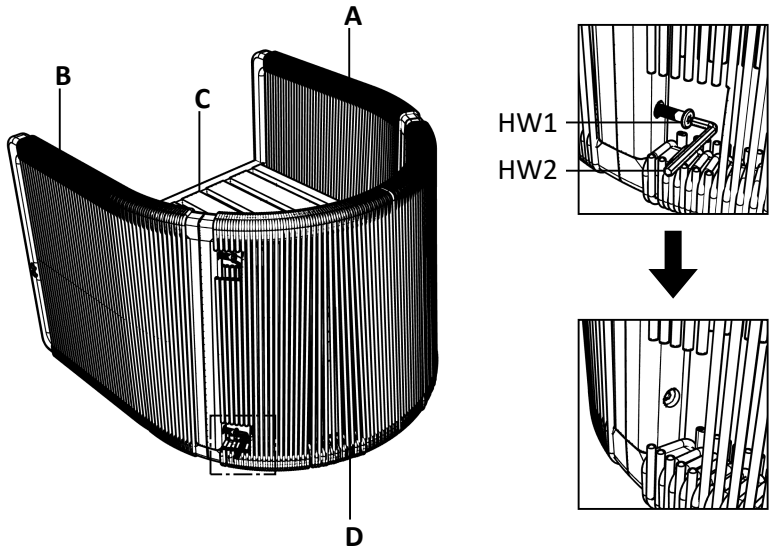

5

Attach bolt cap (HW3) to seal the hole on the side panel left and right (A & B)

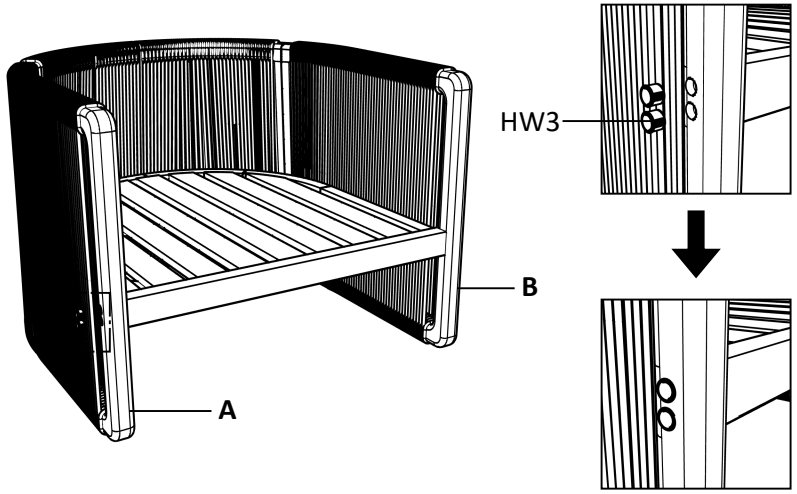

6

Place the chair in the position you use. we'd love to see it -- just tag us
(we're @safavieh) and use the hastag #safavieh on instagram!

