CHRYSSA ALUMINUM AND TEAK PATIO CHAIR

DESIGN#CPT4007A

Assembly Instructions

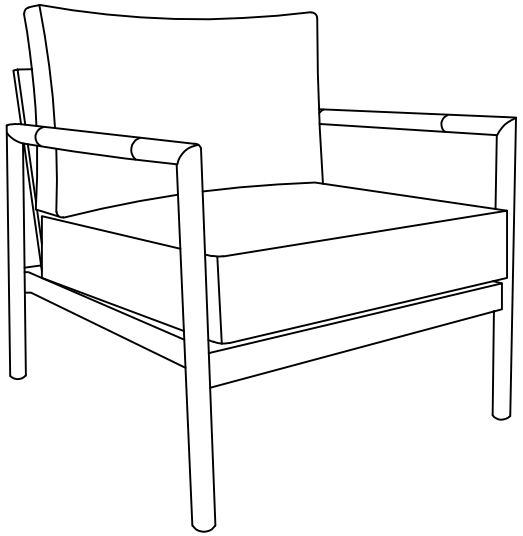

Need help?
Feel free to contact us via email or call
if you have any specific questions!

contact us:
cs@safavieh.com
866-422-9070

SAFAVIEH
COUTURE

Thanks for bringing Safavieh Couture into your home

Everything we make is incredibly simple to set up,induding your new chair. You won't need any additional tools.

Parts & hardware

2 x
Armrest



1 x
Seat Board



1 x
Back Rest



1 x
Allen Key



6 x
M6*40mm Bolt



2 x
M6*65mm Bolt



8 x
M6 Washer



1 x
Seat Cushion



1 x
Back Cushion



1

Take out one armrest and the seat board, align the screw holes, and connect the armrest and seat board using an M6*40mm bolt and M6 washer. Do not tighten all bolts until the seat is fully assembly.

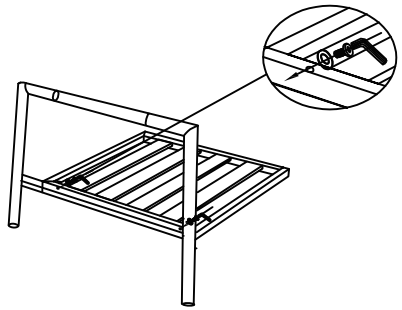

2

Take out the other armrest and align the holes. Use the same method to secure the other armrest to the seat board with an M6*40mm bolt and washer.

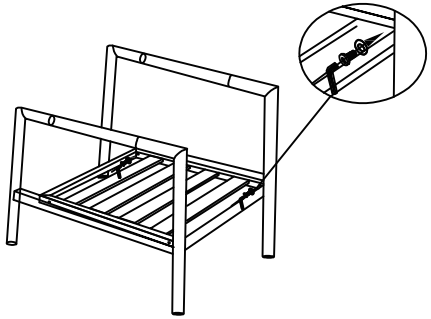

3

Take out the backrest and align the holes. Secure the lower part using an M6*40mm bolt and M6 washer. Secure the upper part using an M6*65mm bolt and washer,tighten all bolts with the allen key.

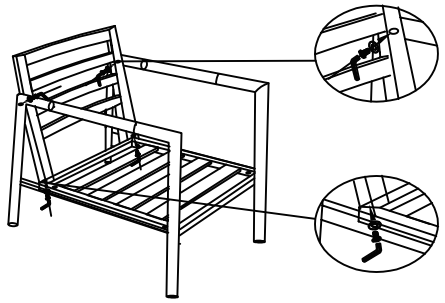

4

The hardware assembly has been completed.

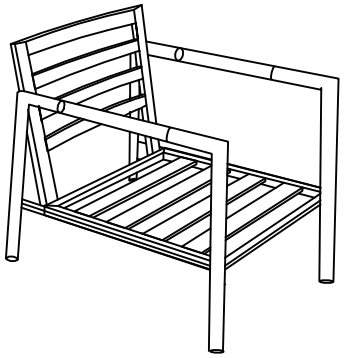

5

Place the seat cushion and back cushion in sequence.Place the Chair in the palce where you use it.we'd love to see it—just tag us（we're @safavieh）and use the hasg tag #safavieh on Instagram!

