DUNCAN CARVED PLINTH 36" SINGLE SINK VANITY

DESIGN # CVN4001-36

Assembly Instructions

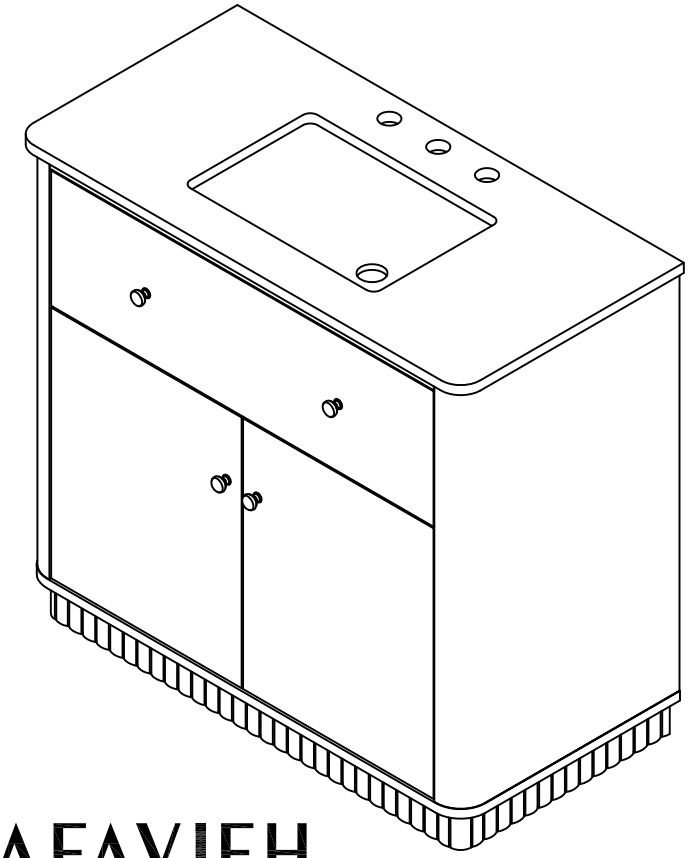

SAFAVIEH
COUTURE

Need help?
Feel free to contact us via email or call if you have any specific questions!

contact us:
cs@safavieh.com
866-422-9070

Thanks for bringing Safavieh Couture into your home

Every thing we make is incredibly simple to set up, including your new vanity.

Parts List

A x 1
TOP SINK

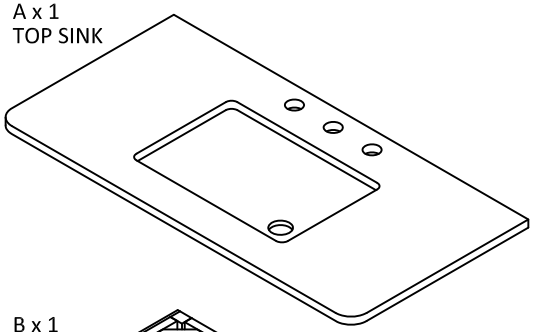

B x 1
UNIT

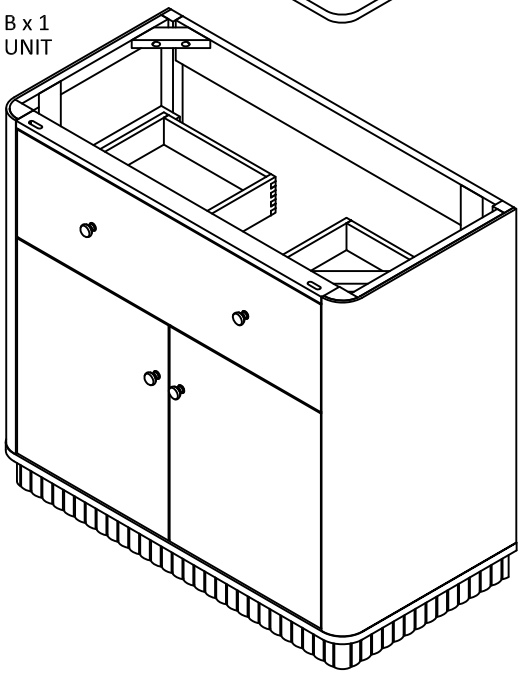

1

Place the vanity Unit (B) upright on a soft and clean surface. Apply silicone sealant (not included) around the top of the vanity Unit (B). Gently align the Top Sink (A) with the vanity Unit (B) and place on top. Let the sealant dry.

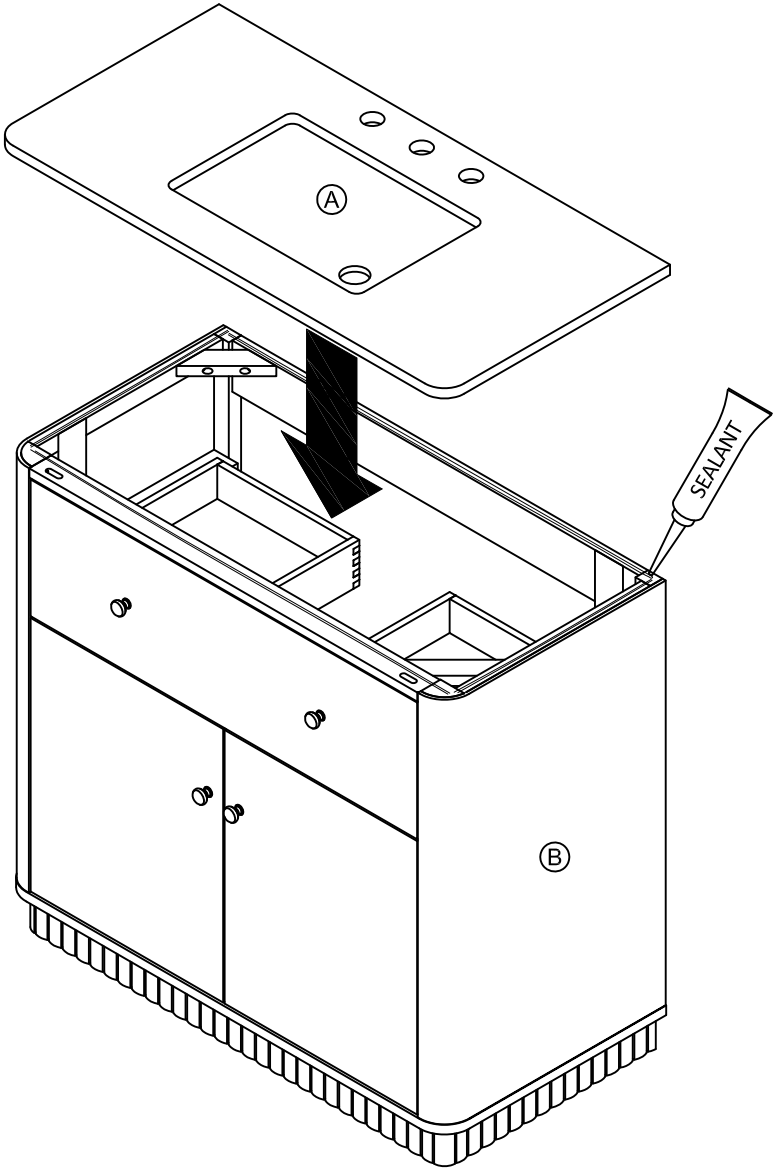

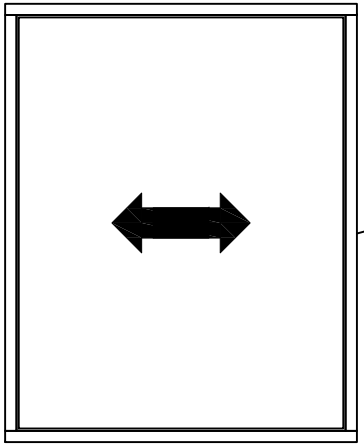

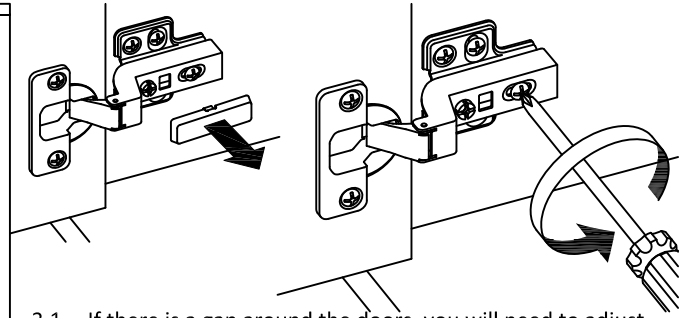

2.1. If there is a gap around the doors, you will need to adjust the hinges to get rid of the gap by first remove the screw cover from the hinges then loosening the back center screw. Note: You can reattach the screw cover once all adjustment steps are completed

2.1.1. If the gap is on the left side of the door, you will need to turn the front center screw counterclockwise and slightly slide the door to the left until the gap is gone.

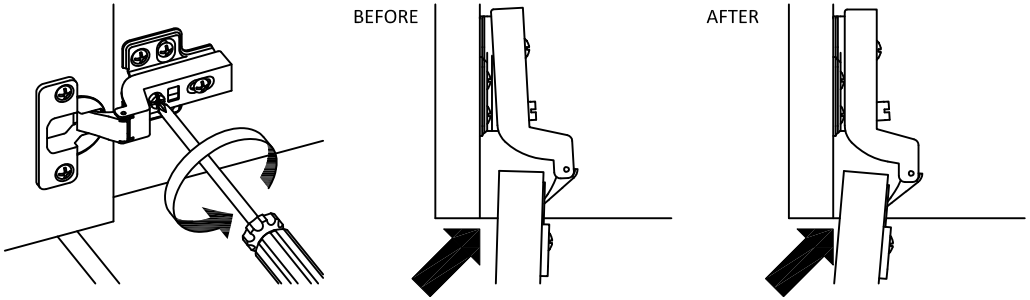

2.1.2. If the gap is on the right side of the door (and the left side doesn't have enough space), you will need to turn the front center screw clockwise and slightly slide the door to the right until the gap is gone.

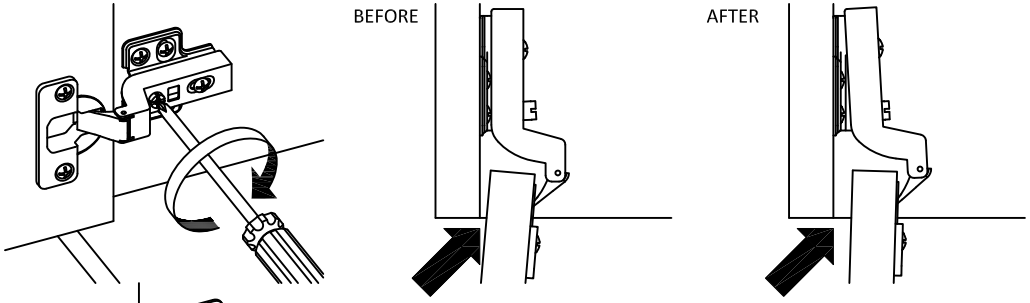

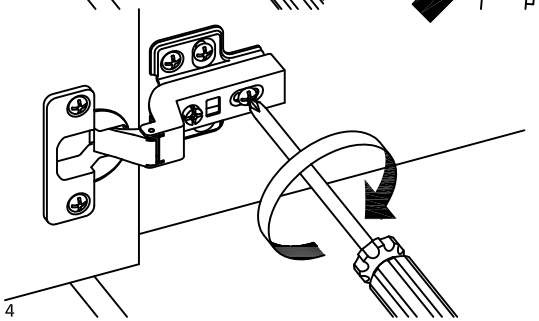

2.2. Retighten the back center screw.

3.1. If you need to move the doors forward or backwards, please follow this step.

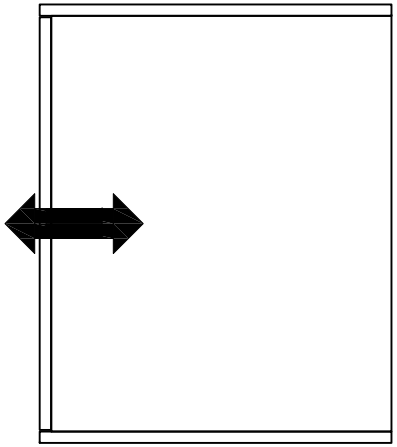

3.2. Loosen the back center screw.

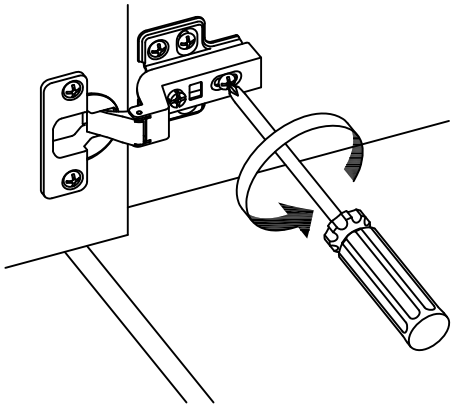

3.2.1. If you need to move the doors backwards, gently push the door until it slides into place.

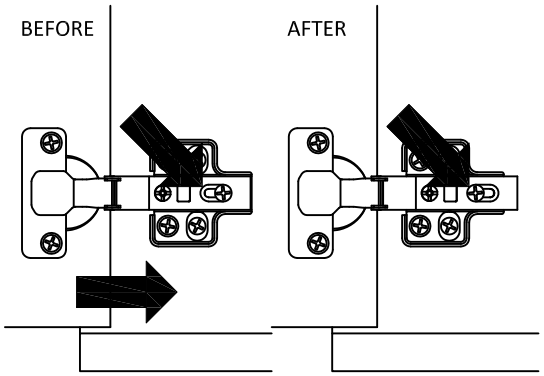

3.2.2. If you need to move the doors forwards, gently pull the door until it slides into place.

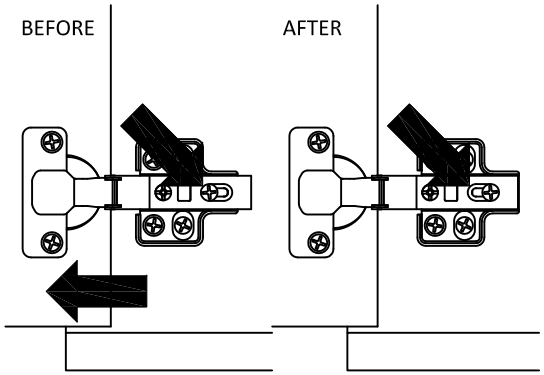

3.3. Retighten the back center screw.

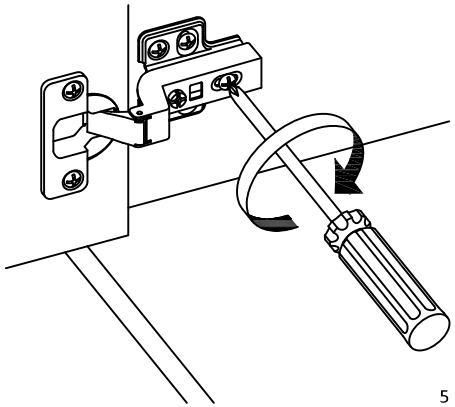

4

Adjust the levelers on the bottom of the vanity as needed to make it level.

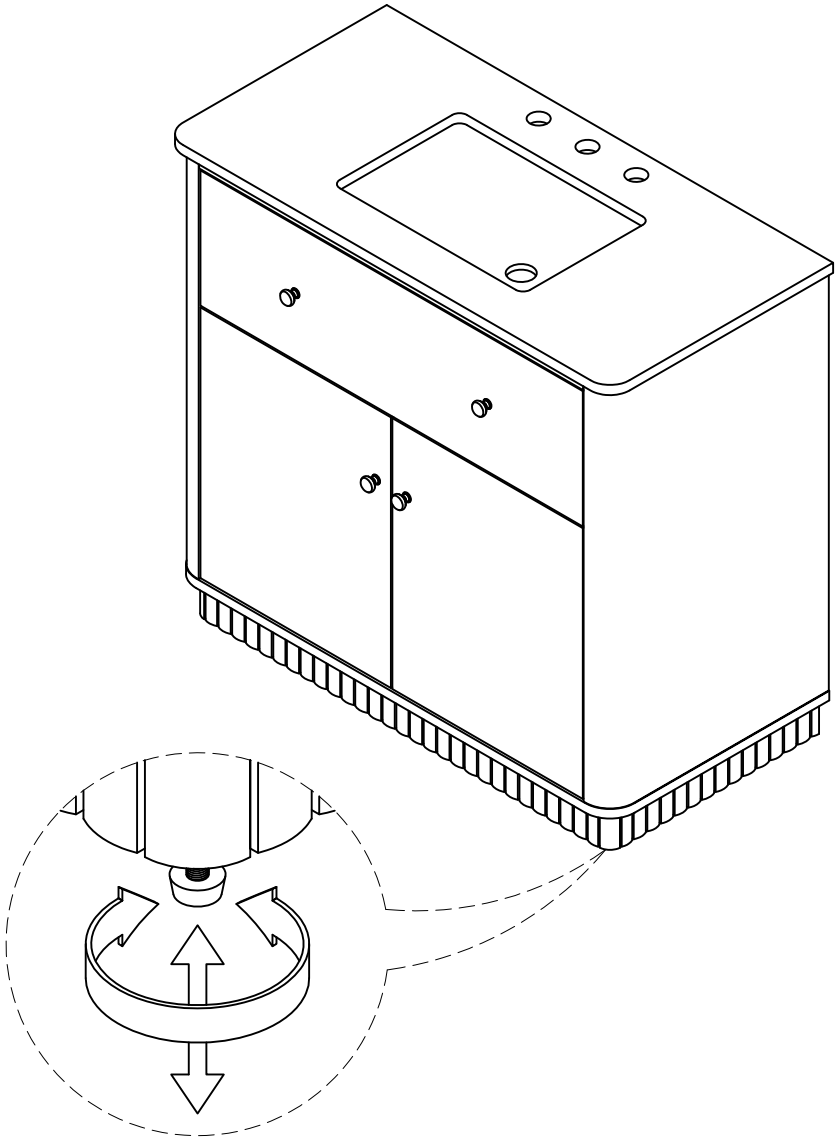

5

Place the vanity in the place where you will use it. We'd love to see it - just tag us (we're @safavieh) and use the hashtag #safavieh on Instagram!

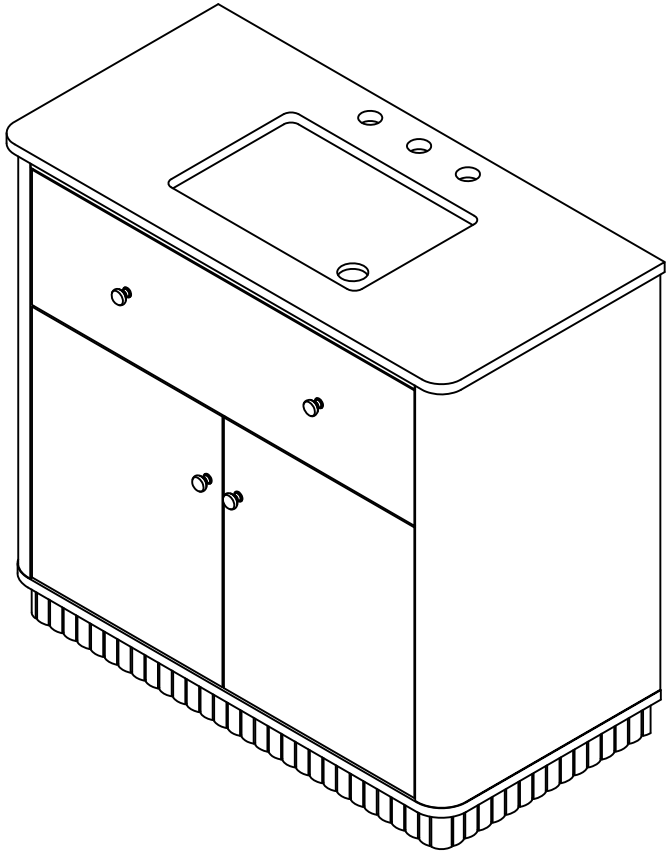

DUNCAN CARVED PLINTH 48" SINGLE SINK VANITY

DESIGN # CVN4001-48

Assembly Instructions

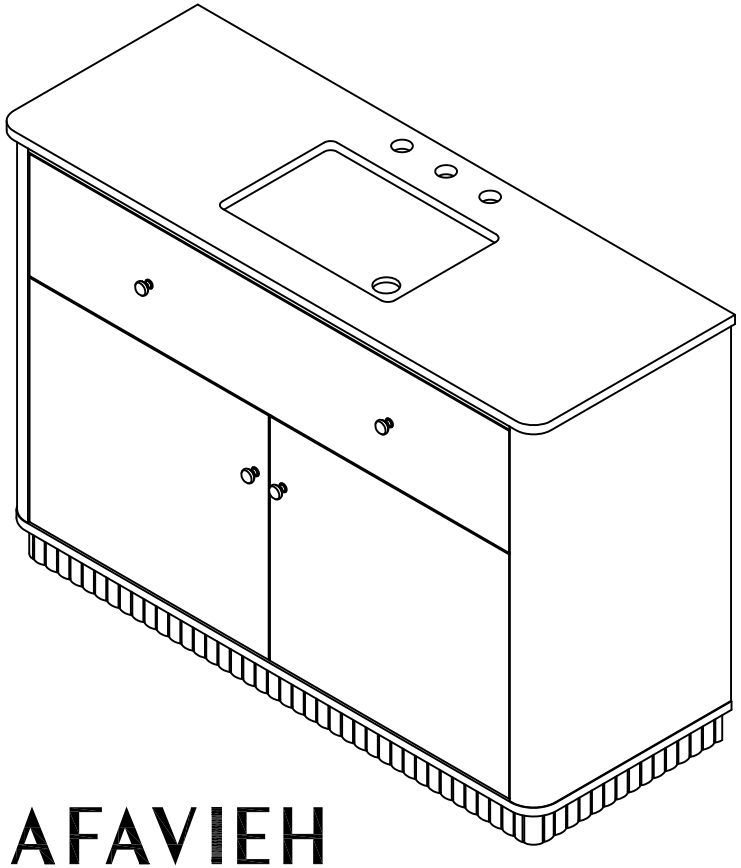

SAFAVIEH
COUTURE

Need help?
Feel free to contact us via email or call if you have any specific questions!

contact us:
cs@safavieh.com
866-422-9070

Thanks for bringing Safavieh Couture into your home

Every thing we make is incredibly simple to set up, including your new vanity.

Parts List

A x 1
TOP SINK

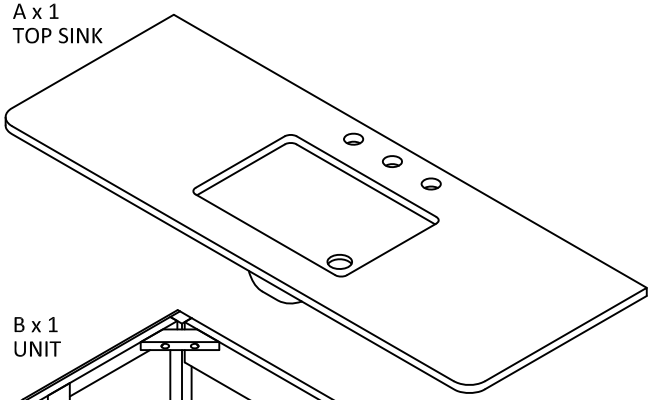

B x 1
UNIT

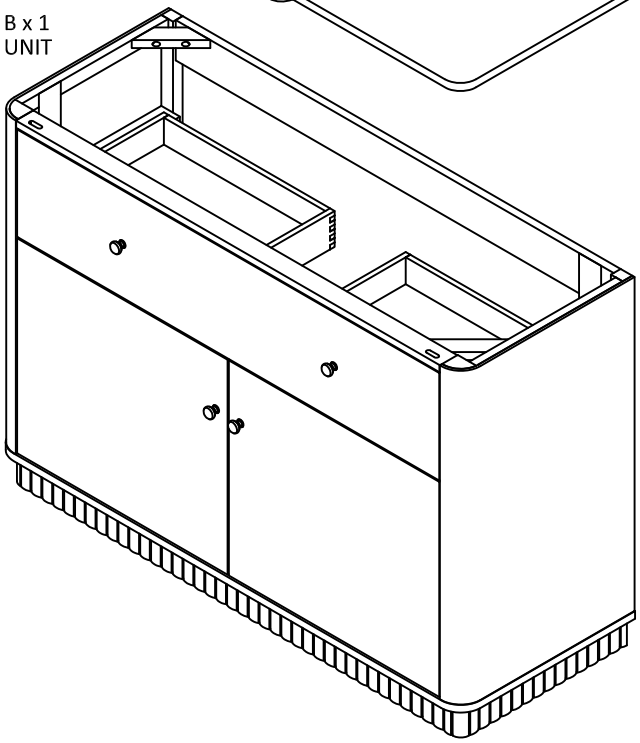

1

Place the vanity Unit (B) upright on a soft and clean surface. Apply silicone sealant (not included) around the top of the vanity Unit (B). Gently align the Top Sink (A) with the vanity Unit (B) and place on top. Let the sealant dry.

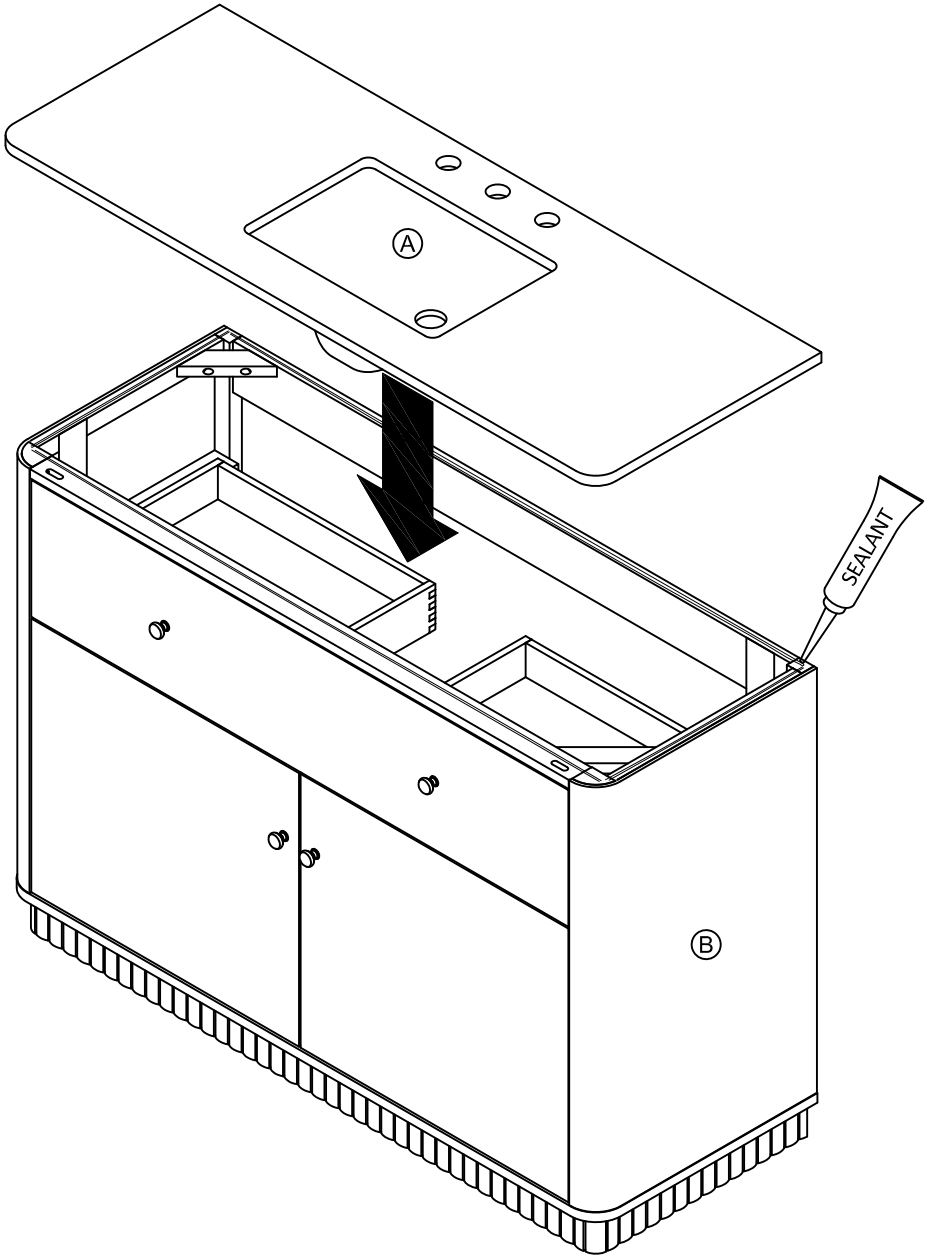

If the edge on the left or right are not balanced, please follow this step

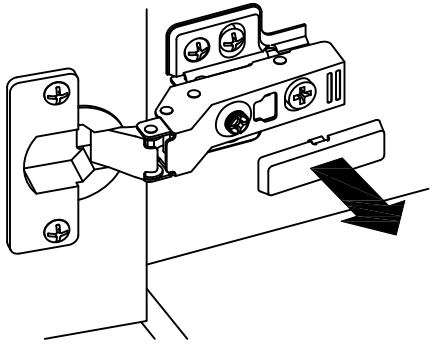

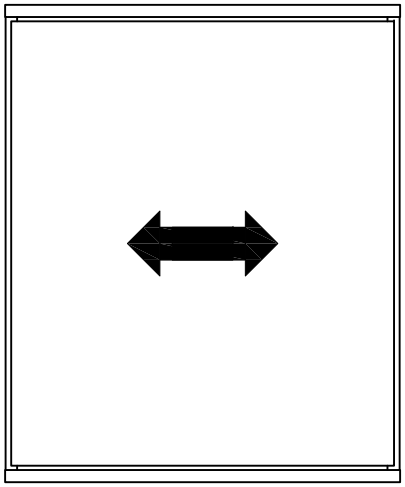

2.1. Remove the screw cover from the hinges
Note: You can reattach the screw cover once all adjustment steps are completed

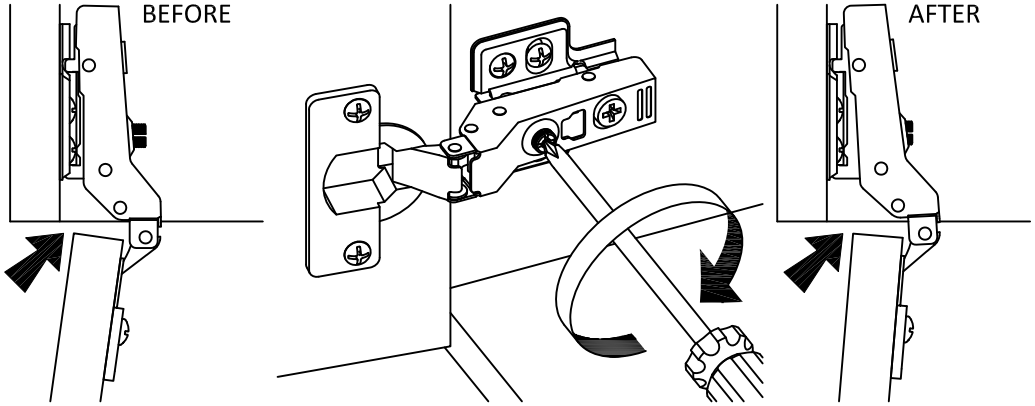

2.2. If the edge on the left side is too narrow, you will need to slide the doors slightly to the right by turning the front center screw counter clockwise.

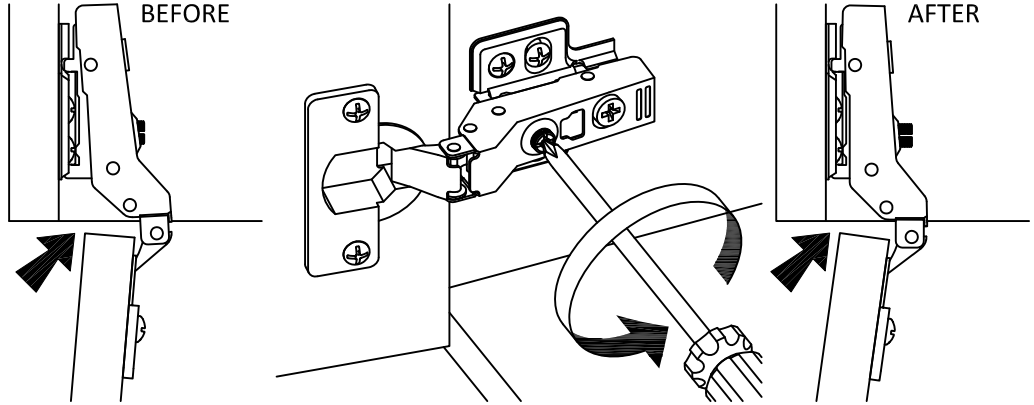

2.3. If the edge on the left side is too wide, you will need to slide the door slightly to the left by turning the front center screw counterclockwise.

If you need to slide the door forward or backward, please follow this step.

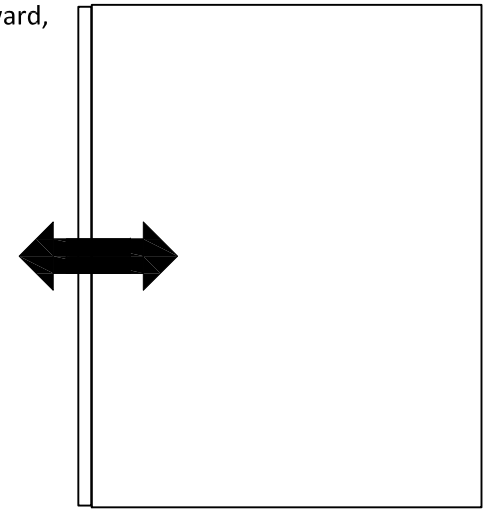

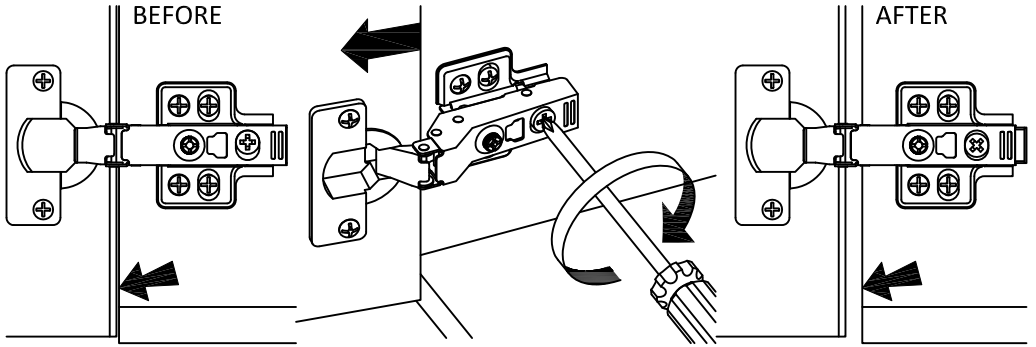

3.1. If you need to slide the door forward. Turn the back center screw clockwise.

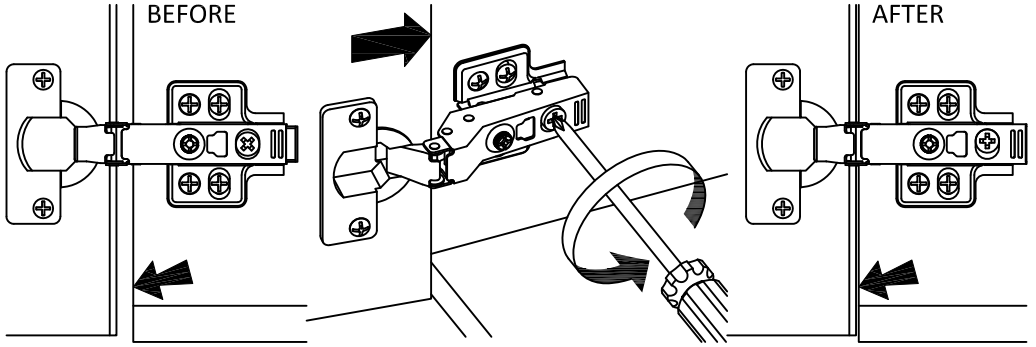

3.2. If you need to slide the door backward. Turn the back center screw counter clockwise.

4

Adjust the levelers on the bottom of the vanity as needed to make it level.

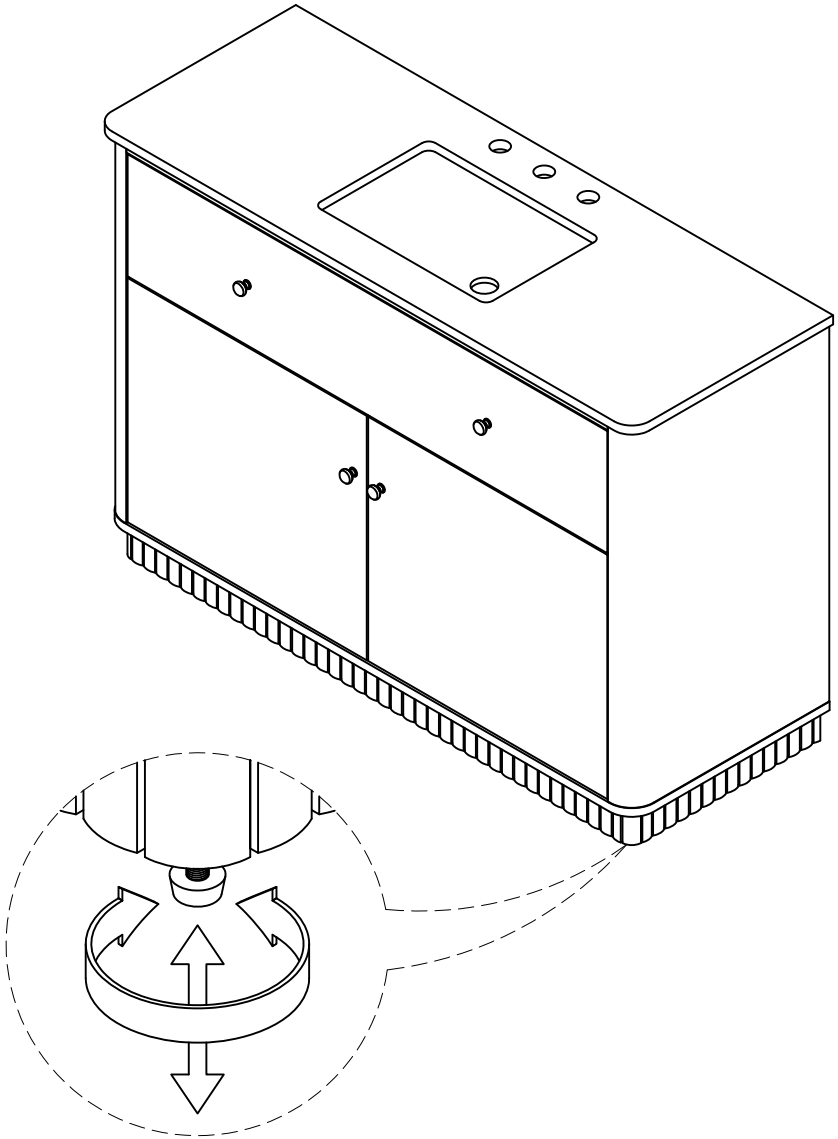

5

Place the vanity in the place where you will use it. We'd love to see it - just tag us (we're @safavieh) and use the hashtag #safavieh on Instagram!

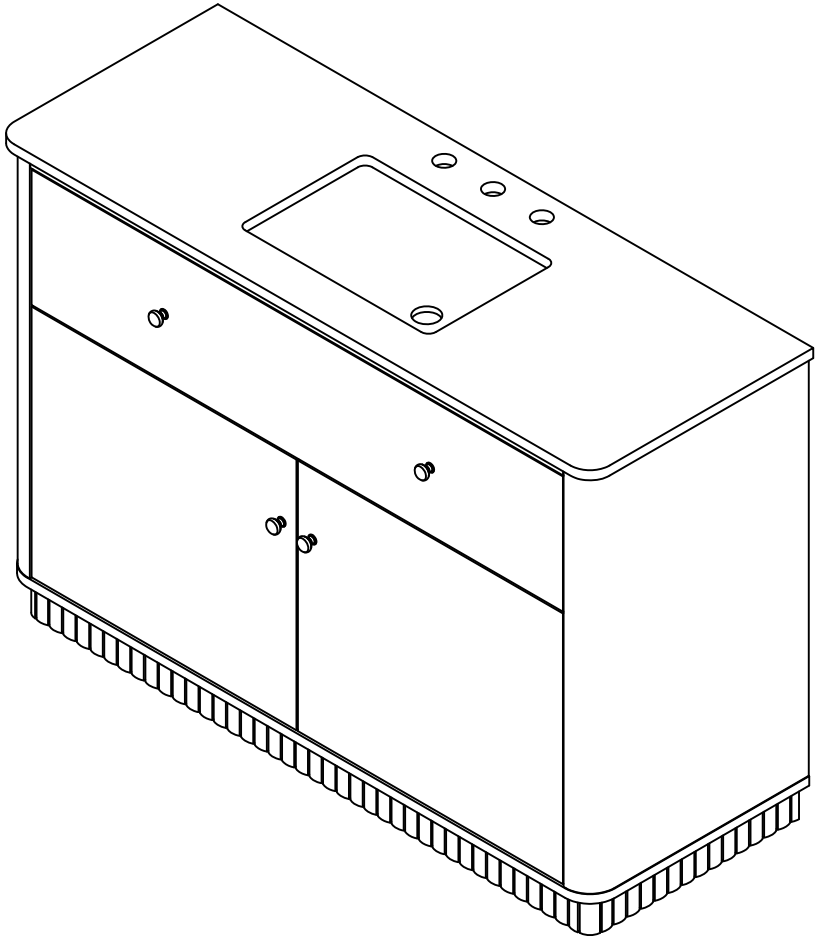

DUNCAN CARVED PLINTH 72" DOUBLE SINK VANITY

DESIGN # CVN4001-72

Assembly Instructions

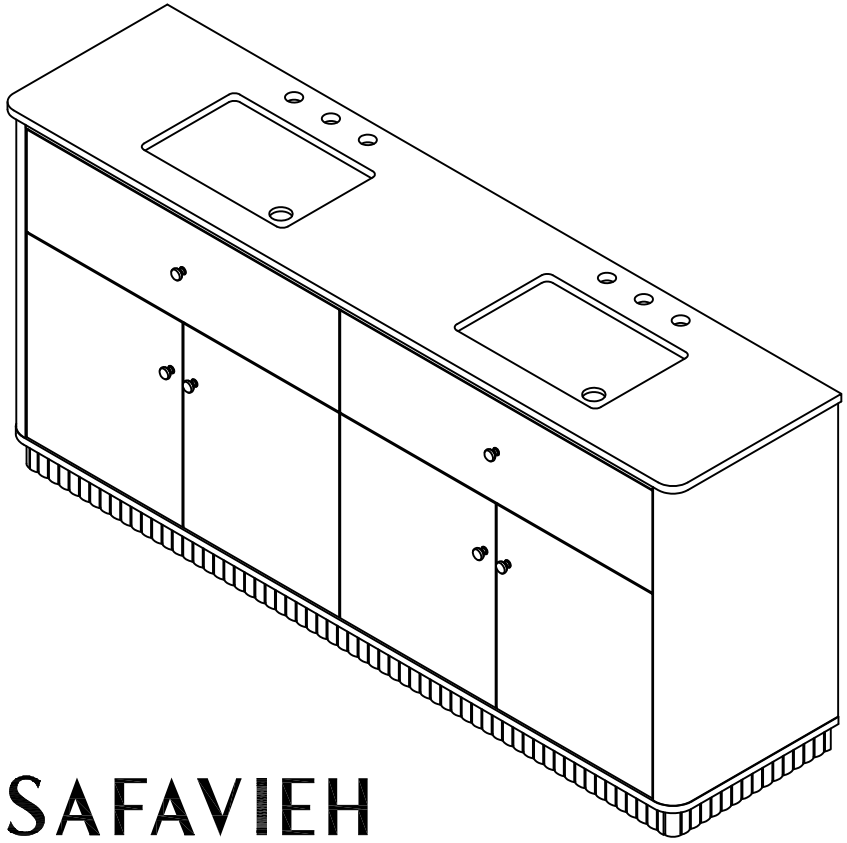

SAFAVIEH
COUTURE

Need help?
Feel free to contact us via email or call if you have any specific questions!

contact us:
cs@safavieh.com
866-422-9070

Thanks for bringing Safavieh Couture into your home

Every thing we make is incredibly simple to set up, including your new vanity.

Parts List

A x 1
TOP SINK

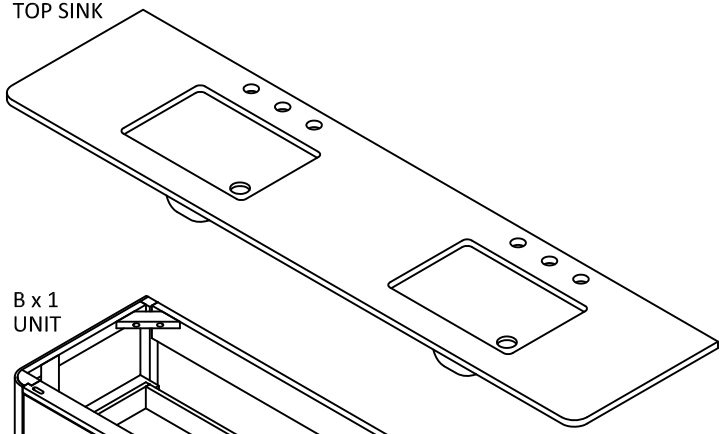

B x 1
UNIT

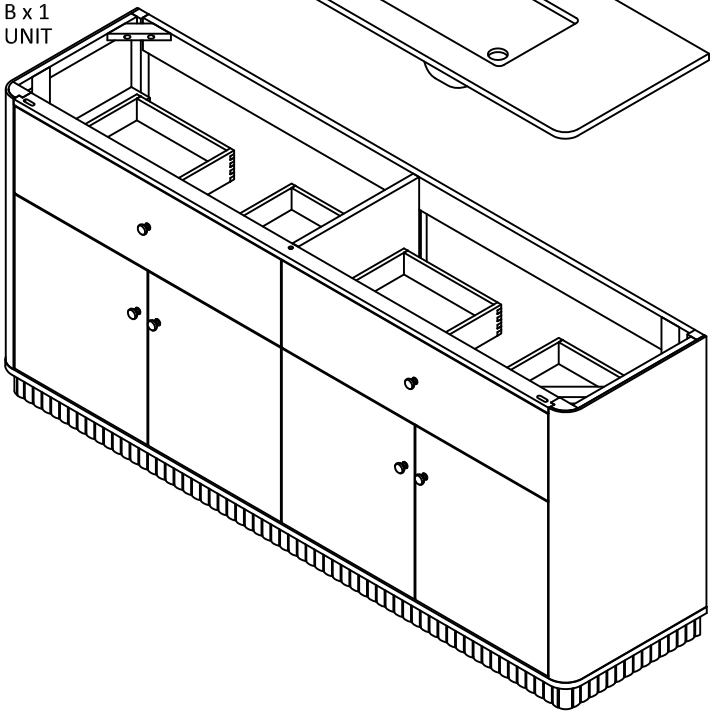

1

Place the vanity Unit (B) upright on a soft and clean surface. Apply silicone sealant (not included) around the top of the vanity Unit (B). Gently align the Top Sink (A) with the vanity Unit (B) and place on top. Let the sealant dry.

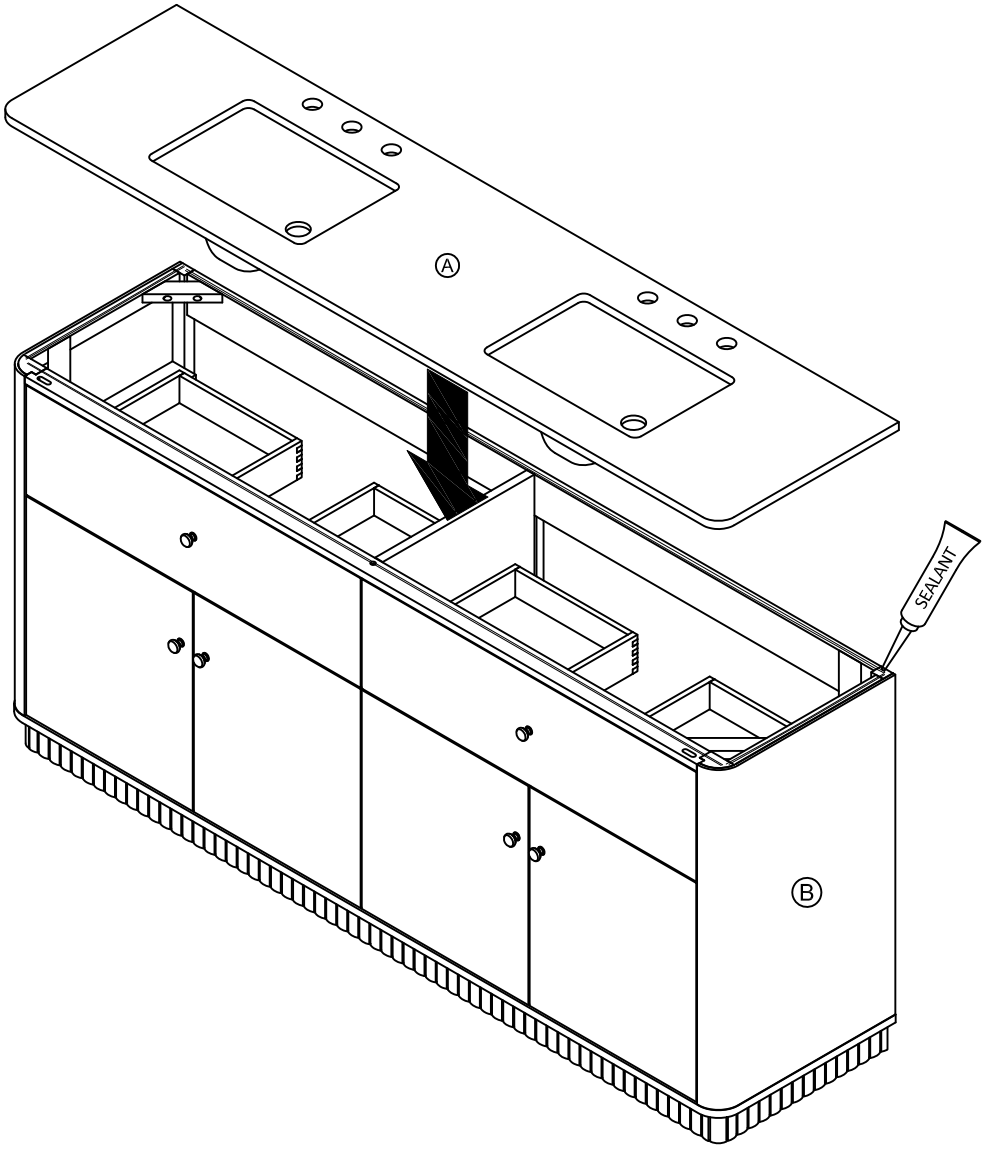

If the edge on the left or right are not balanced, please follow this step

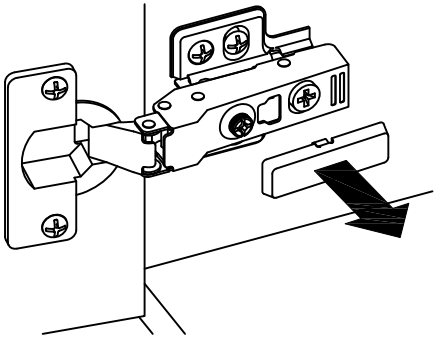

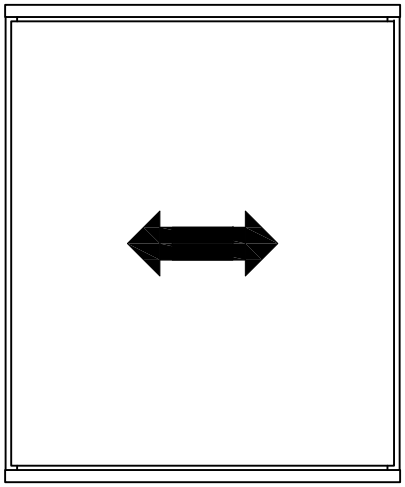

2.1. Remove the screw cover from the hinges
Note: You can reattach the screw cover once all adjustment steps are completed

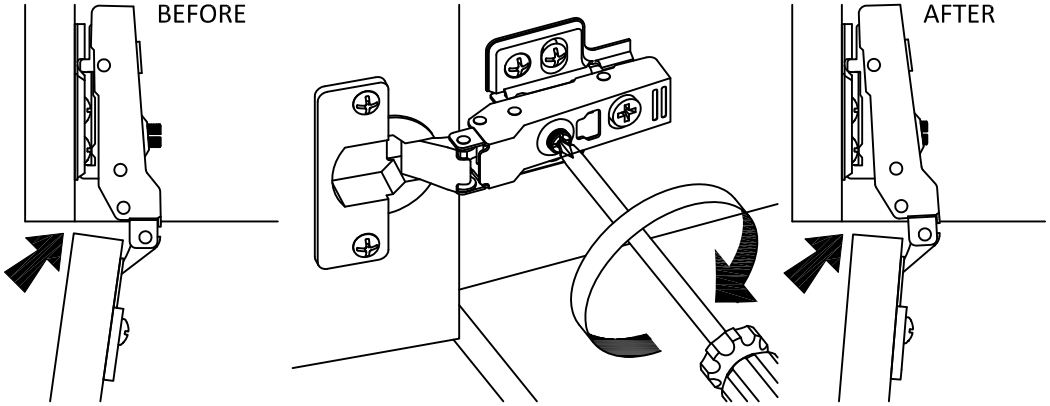

2.2. If the edge on the left side is too narrow, you will need to slide the doors slightly to the right by turning the front center screw counter clockwise.

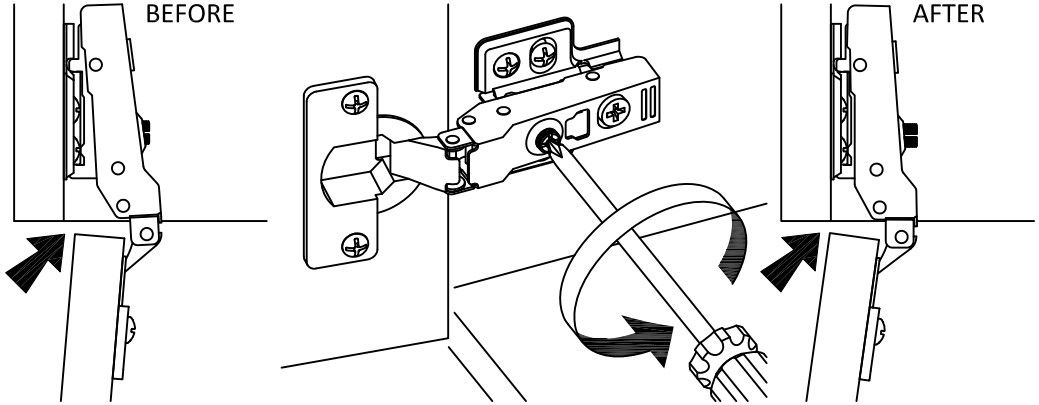

2.3. If the edge on the left side is too wide, you will need to slide the door slightly to the left by turning the front center screw counterclockwise.

If you need to slide the door forward or backward, please follow this step.

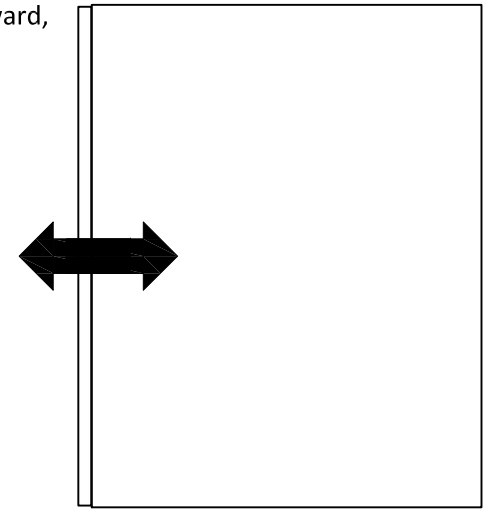

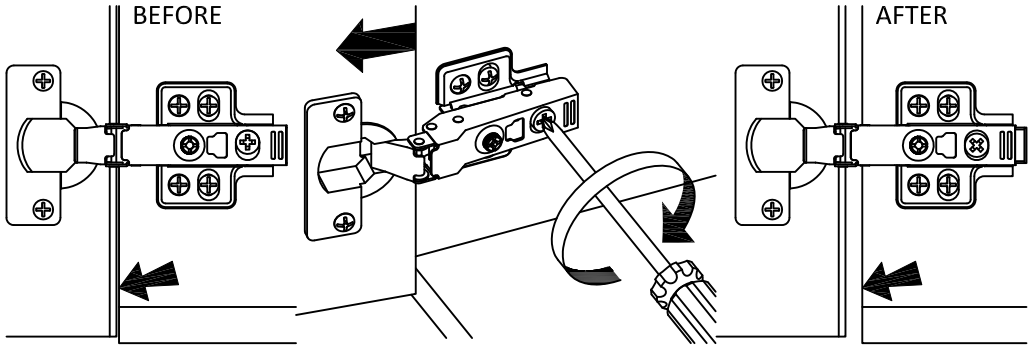

3.1. If you need to slide the door forward. Turn the back center screw clockwise.

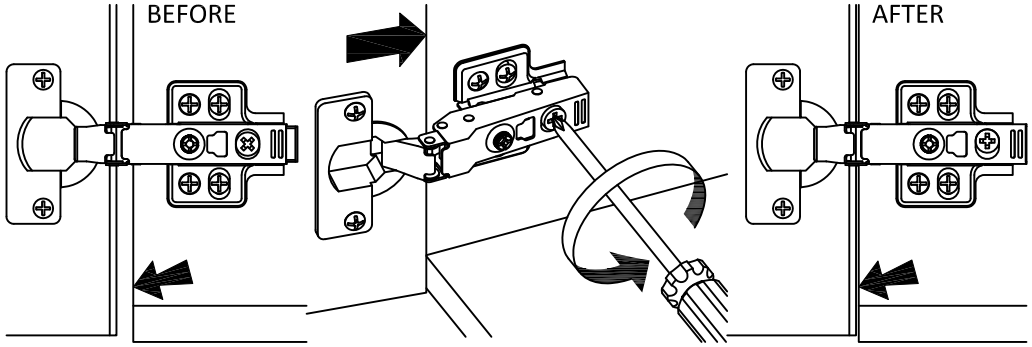

3.2. If you need to slide the door backward. Turn the back center screw counter clockwise.

4

Adjust the levelers on the bottom of the unit as needed.

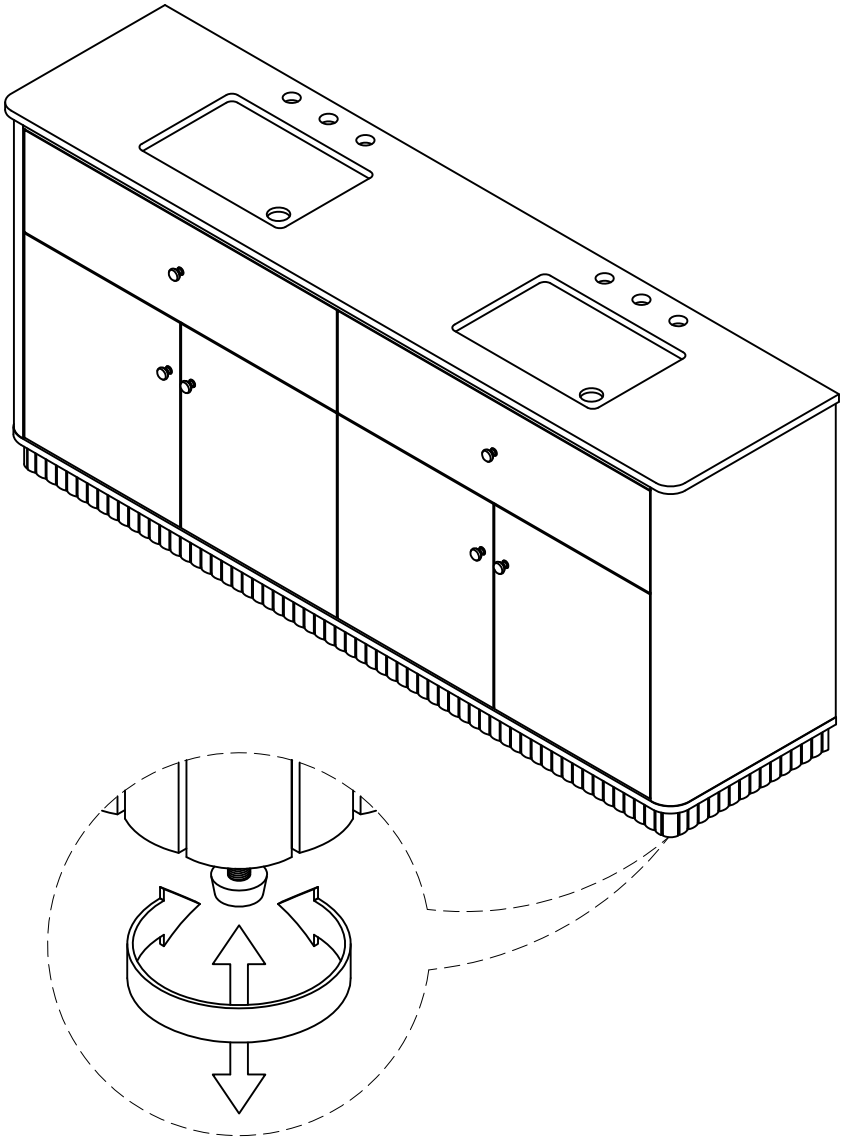

5

Place the vanity in the place where you will use it. We’d love to see it – just tag us (we’re @safavieh) and use the hashtag #safavieh on Instagram!

