SICILY VELVET ARM CHAIR

DESIGN # **KNT7060**

Assembly Instructions

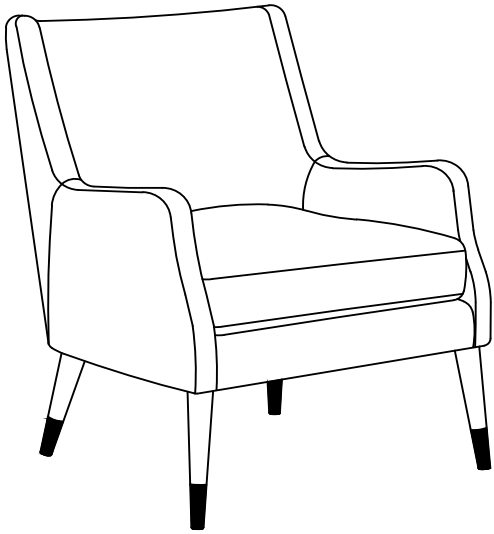

SAFAVIEH COUTURE

Thanks for bringing Safavieh Couture into your home

Every thing we make is incredibly simple to set up, including your new chair.You won't need any tools.

Parts List

A x 1
BODY



B x 2
BACK LEG



C x 2
FRONT LEG



Hardware List

HW1 x 12
Flat Washer



HW2 x 12
Spring Washer



HW3 x 12
Bolt 6x25mm



HW4 x 1
Allen Key



1

Remove all parts and hardware from the box and verify that everything was there.
Place the Body (A) upside down on a soft and clean surface.

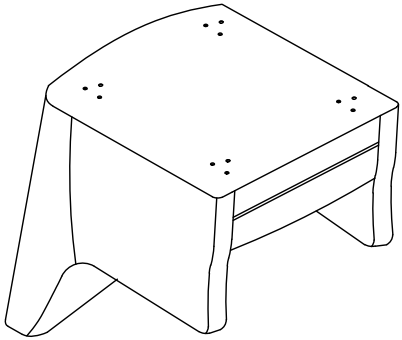

2

Align the screw holes on the Back Legs (B) to the screw holes on the back of the chair Body (A). Attach the Legs (B) by placing the Spring Washer (HW2) and the Flat Washer (HW1) on the Bolts (HW3) and then using the Allen Key (HW4) to screw in the bolts. Repeat this step for the Front Legs (C) to attach them to the front of the chair Body (A).
Tip: Hand-tighten all bolts first, then fully tighten to ensure proper alignment.

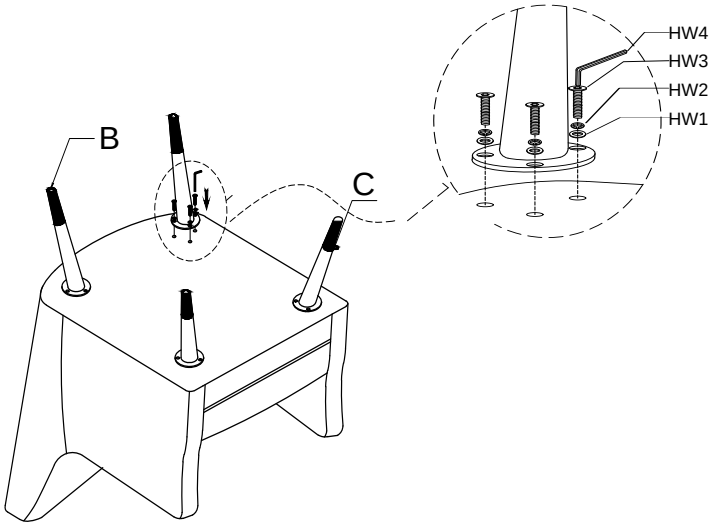

3

Turn the chair upright and check that its level by placing it on a level surface. Adjust the screws as needed to make sure its level. Check that all legs are firmly secured.

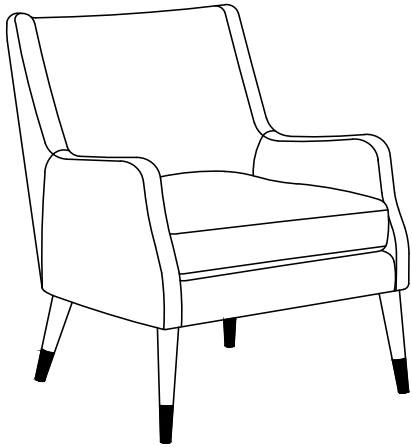

4

Place the chair in the place where you will use it. We'd love to see it – just tag us (we're @safavieh) and use the hashtag #safavieh on Instagram!

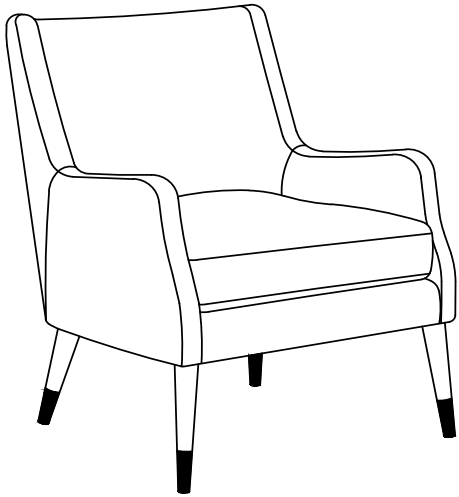

Need help?
Feel free to contact us via email or call
if you have any specific questions !
contact us:
cs@safavieh.com
866-422-9070