NOTICE

* Please make sure that you have all parts indicated and they are in good condition before you begin assembly of this item. Refer to part list and hardware list below for guidance.
* This item should be assembled on a soft surface to prevent scratching the finish during assembly.
* This item may require periodic tightening.
* If you are having difficulty, our friendly Customer Care team is always here to help. Please email **customersupport@safavieh.com**

PREPARATION

* Before beginning assembly of product, make sure all parts are present. Compare parts with part contents list and hardware contents list.
* If any part is missing or damaged, do not attempt to assemble the product.
* Estimated Assembly Time: 60 minutes.
* Tools Required for Assembly : Hex Wrench, L Key (included), Phillips screwdriver (not included)

CARE AND MAINTENANCE

Adhesive felt pads should always be applied to areas of furniture which make direct contact with flooring, said application will prevent damage to the furniture and or surfaces on which the furniture lies. Objects placed on articles of furniture should rest on non abrasive material as to prevent damage to the wood finish. Wipe up spills immediately and avoid common hazards such as hot dishes, harsh solvents and abrasives. Cleaning should be done with a soft lint free cotton cloth dampened with water or furniture polish.

Part List and Hardware List

PIECE	DESCRIPTION	PICTURE	QTY	CARTON CALL
A	HEADBOARD	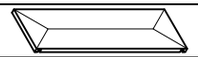	1X	1 OF 2
B	LEFT POST		1X	1 OF 2
C	RIGHT POST		1X	1 OF 2
D	FOOTBOARD	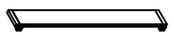	1X	1 OF 2
E	SIDE RAIL		2X	2 OF 2
F	SLAT		4X	2 OF 2
G	CENTER LEG		8X	2 OF 2
HW1	THREADED ROD 5/16" x 0.06" x 3 1/4"		8X	1 OF 2
HW2	SQUARE WASHER		8X	1 OF 2
HW3	HEX NUT		8X	1 OF 2
HW4	HEX WRENCH		1X	1 OF 2
HW5	BOLT 6 x 1 x 50 MM		6X	1 OF 2
HW6	BOLT 6 x 1 x 35 MM		8X	1 OF 2
HW7	SPRING WASHER Ø13 x 1 MM		14X	1 OF 2
HW8	FLAT WASHER Ø16 x 1 MM		14X	1 OF 2
HW9	L KEY		1X	1 OF 2
HW10	DOWEL		8X	1 OF 2
HW11	ROUND HEAD SCREW 4 x 1 x 25 MM		16X	1 OF 2

SAFAVIEH COUTURE

Model# SFV1327-K
Product Dimensions: 80"W x 85 3/4"D x 34"H

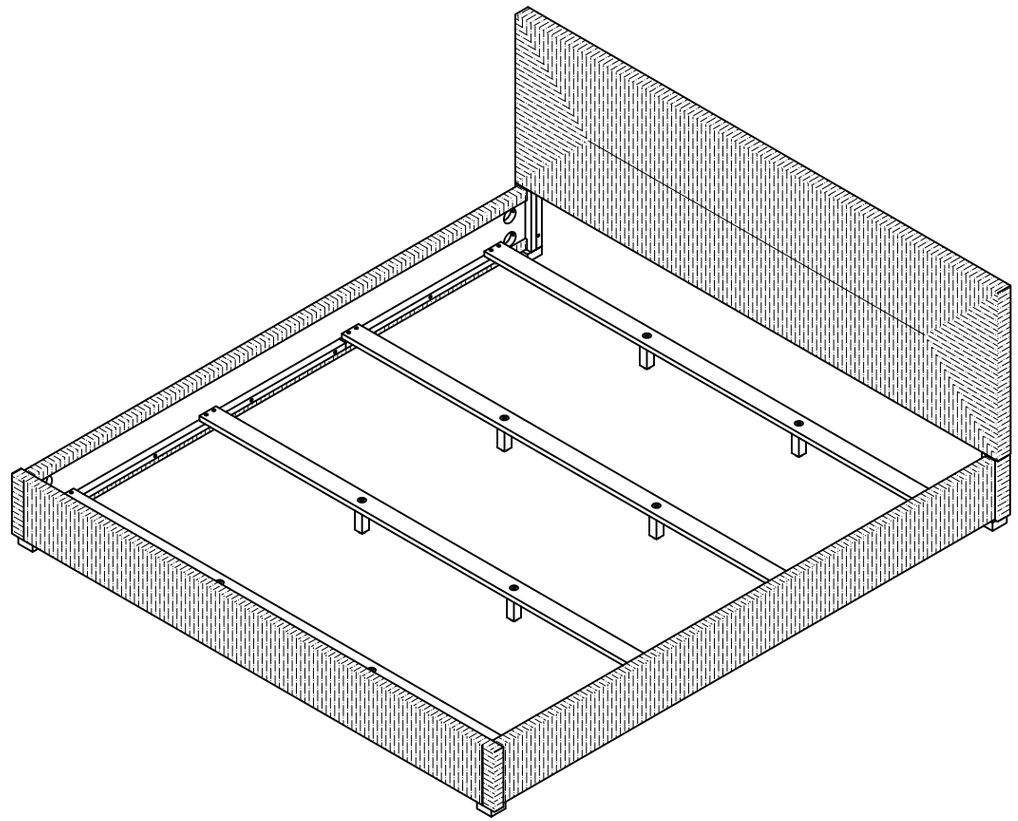

⚠ WARNING ⚠

WEIGHT CAPACITY: 400 LBS
WARNING: DO NOT STAND ON THE BED
WARNING: DO NOT OVER TORQUE NUTS/SCREWS

PREPARATION

* Before beginning assembly of product, make sure all parts are present. Compare parts with part contents list and hardware contents list.
* If any part is missing or damaged, do not attempt to assemble the product.
* Estimated Assembly Time: 60 minutes.
* Tools Required for Assembly : Hex Wrench, L Key (included), Phillips screwdriver (not included)
* If you are having difficulty, our friendly Customer Care team is always here to help. Please email **customersupport@safavieh.com**

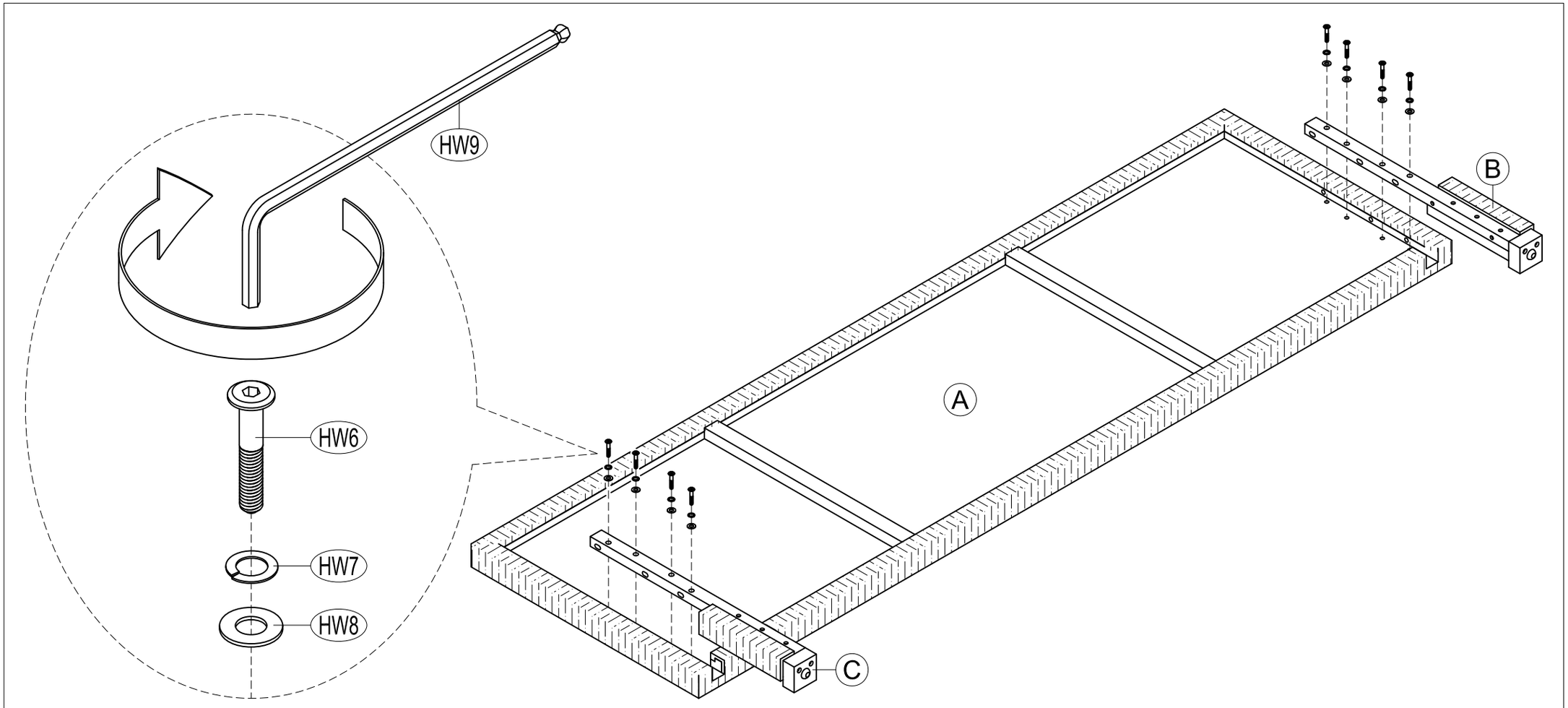

STEP 1 ATTACH HEADBOARD (A) TO LEFT AND RIGHT POSTS (B) AND (C) USING BOLTS 35 MM (HW6), SPRING WASHERS (HW7) AND FLAT WASHERS (HW8). TIGHTEN BOLTS USING L KEY (9).

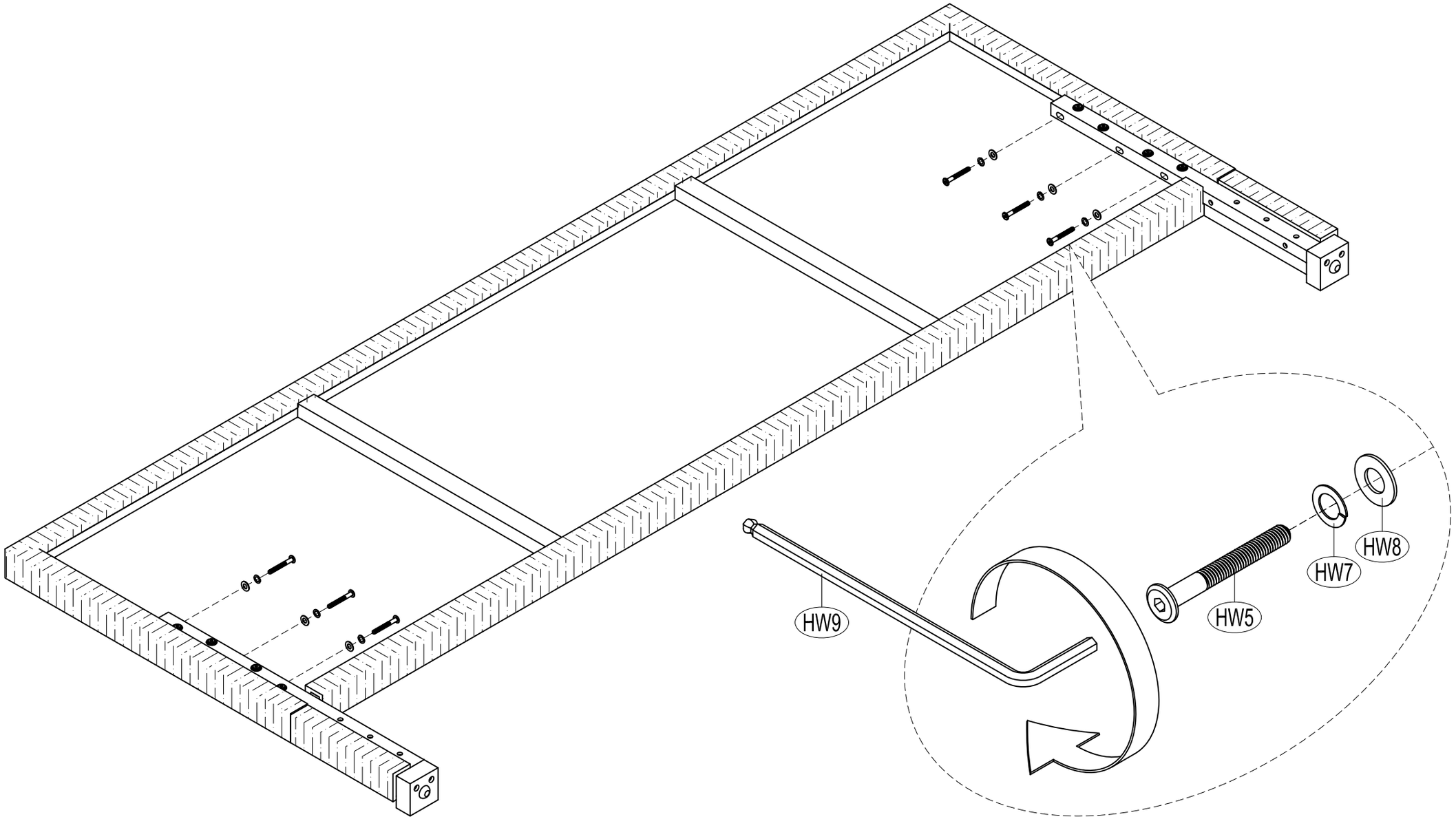

STEP 2 ATTACH BOLTS 50 MM (HW5), SPRING WASHERS (HW7) AND FLAT WASHERS (HW8) TO UNIT. TIGHTEN BOLTS USING L KEY (HW9).

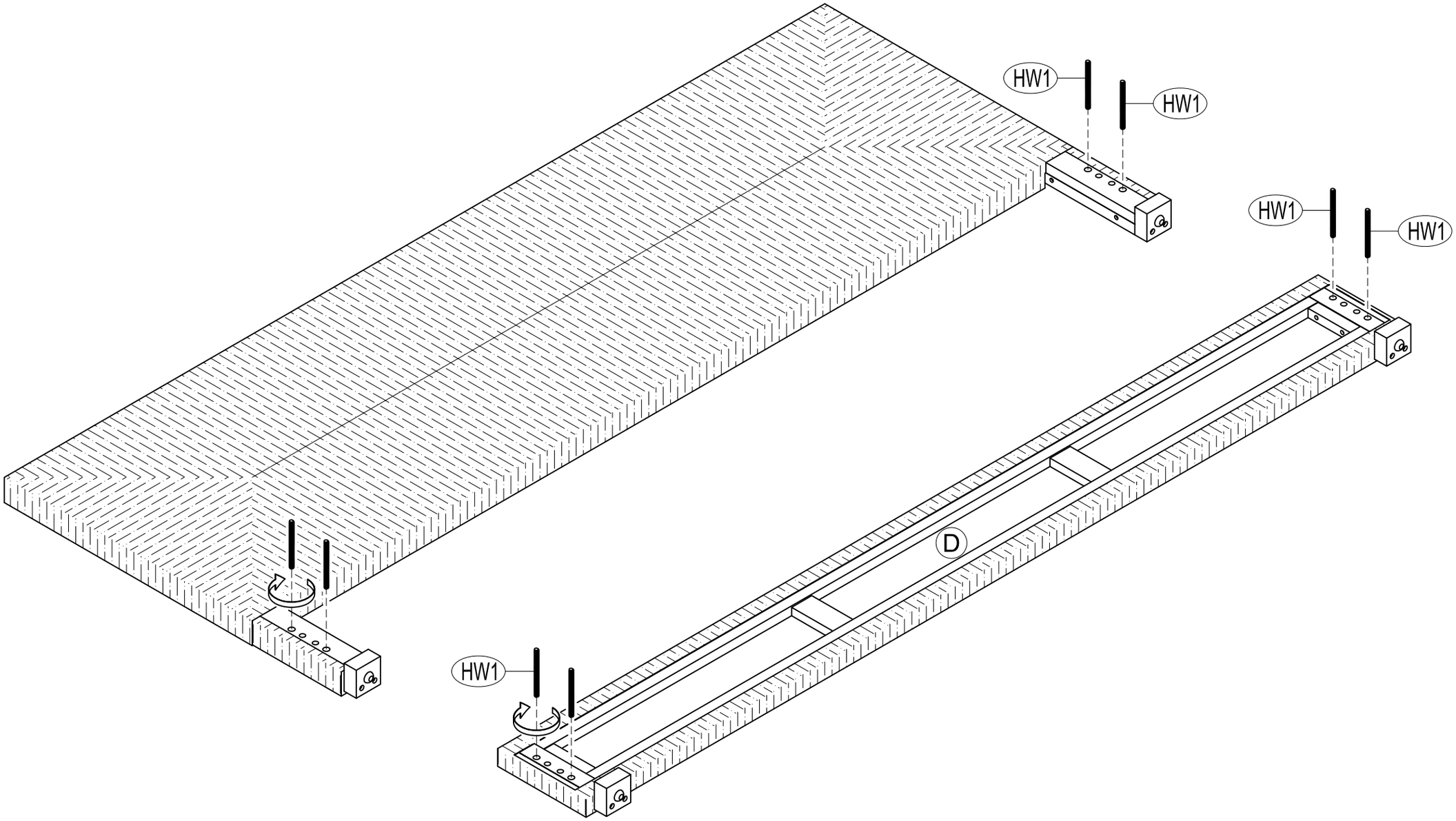

STEP 3 ATTACH THREADED RODS (HW1) TO THE HEADBOARD ASSEMBLY AND FOOTBOARD (D). TIGHTEN THE RODS.

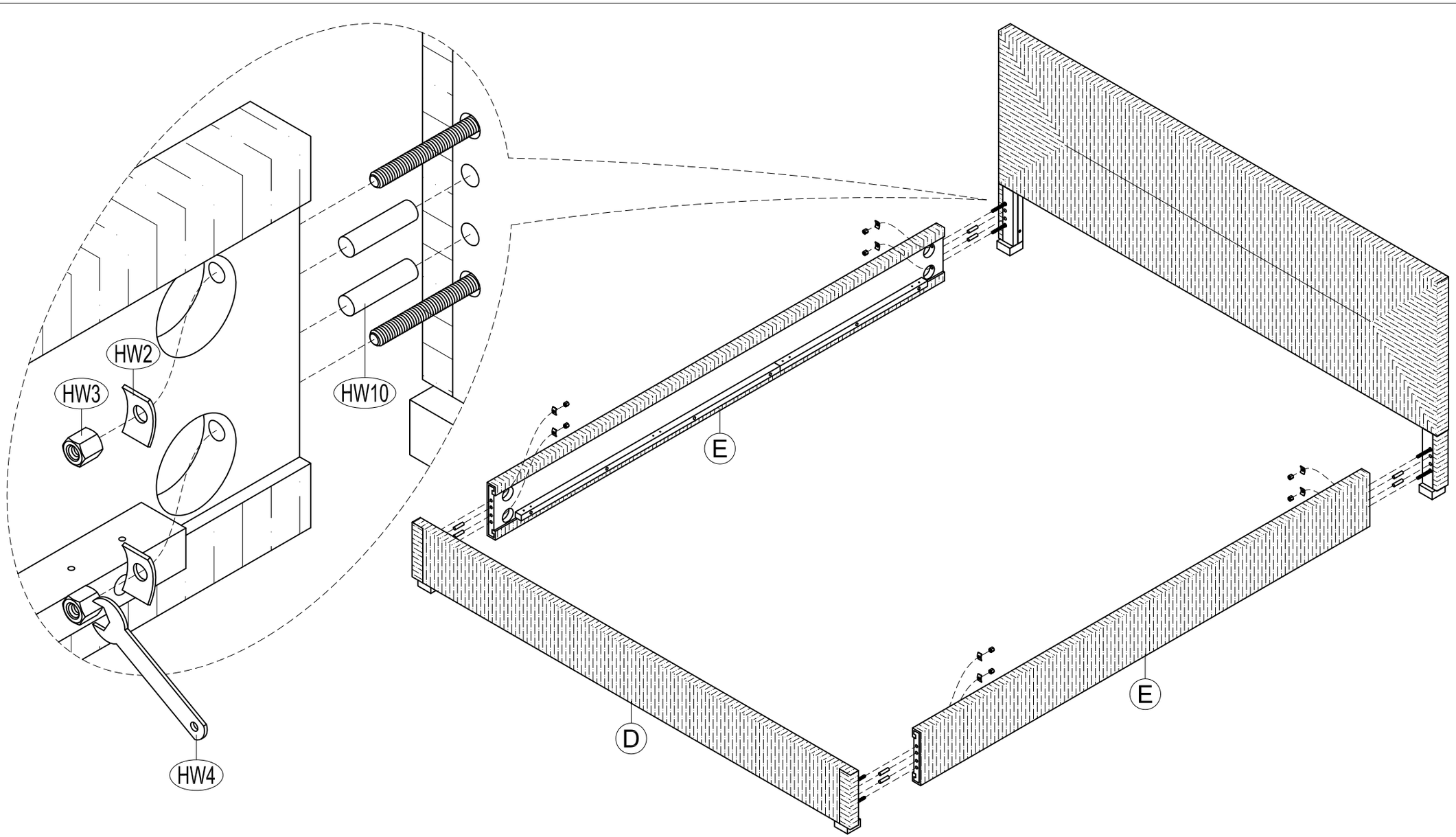

STEP 4 ATTACH SIDE RAILS (E) TO THE HEADBOARD ASSEMBLY AND FOOTBOARD (D) USING SQUARE WASHERS (HW2), HEX NUTS (HW3) AND DOWELS (HW10). TIGHTEN NUTS USING THE HEX WRENCH (HW4).

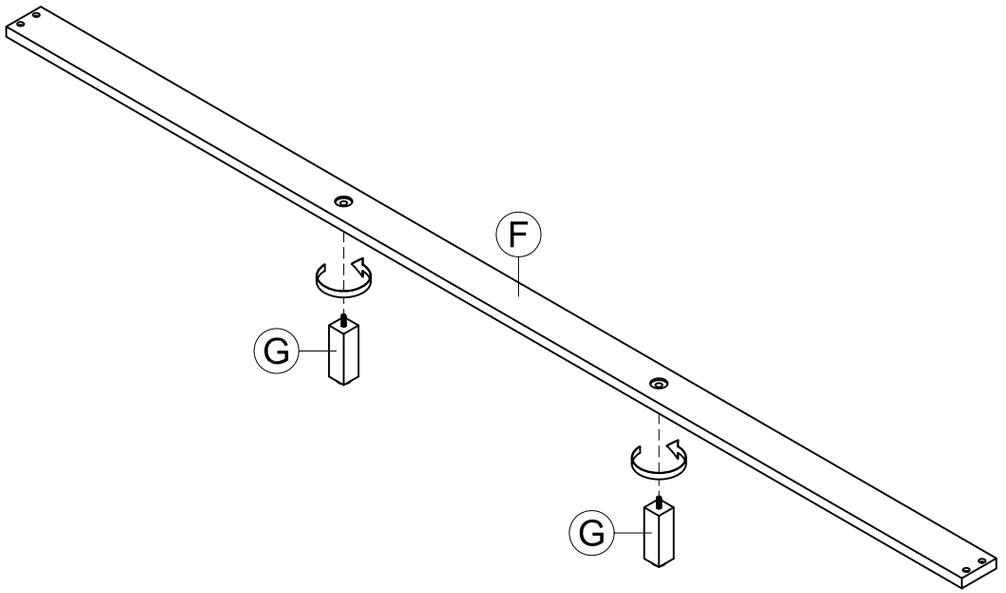

4X

STEP 5 SCREW IN CENTER LEGS (G) TO SLATS (F).

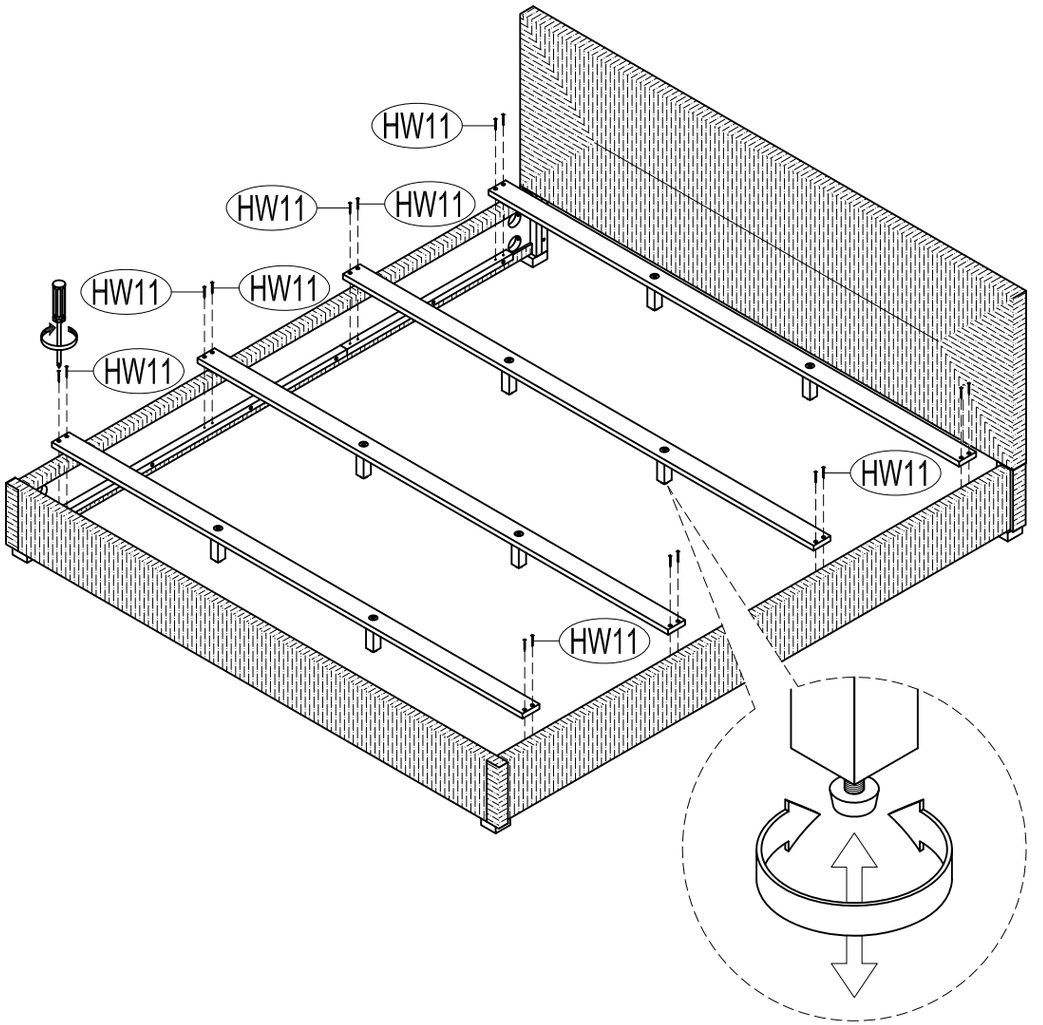

STEP 6 ATTACH THE SLATS TO THE SIDE RAILS BY SCREWING IN ROUND HEAD SCREWS 25 MM (HW11). LEVEL THE BED BY ADJUSTING THE ADJUSTABLE LEVELERS ON THE BOTTOM OF THE CENTER LEGS.

NOTICE

* Please make sure that you have all parts indicated and they are in good condition before you begin assembly of this item. Refer to part list and hardware list below for guidance.
* This item should be assembled on a soft surface to prevent scratching the finish during assembly.
* This item may require periodic tightening.
* If you are having difficulty, our friendly Customer Care team is always here to help. Please email **customersupport@safavieh.com**

PREPARATION

* Before beginning assembly of product, make sure all parts are present. Compare parts with part contents list and hardware contents list.
* If any part is missing or damaged, do not attempt to assemble the product.
* Estimated Assembly Time: 60 minutes.
* Tools Required for Assembly : Hex Wrench, L Key (included), Phillips screwdriver (not included)

CARE AND MAINTENANCE

Adhesive felt pads should always be applied to areas of furniture which make direct contact with flooring, said application will prevent damage to the furniture and or surfaces on which the furniture lies. Objects placed on articles of furniture should rest on non abrasive material as to prevent damage to the wood finish. Wipe up spills immediately and avoid common hazards such as hot dishes, harsh solvents and abrasives. Cleaning should be done with a soft lint free cotton cloth dampened with water or furniture polish.

Part List and Hardware List

PIECE	DESCRIPTION	PICTURE	QTY	CARTON CALL
A	HEADBOARD	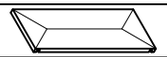	1X	1 OF 2
B	LEFT POST		1X	1 OF 2
C	RIGHT POST		1X	1 OF 2
D	FOOTBOARD		1X	1 OF 2
E	SIDE RAIL		2X	2 OF 2
F	SLAT		4X	2 OF 2
G	CENTER LEG		4X	2 OF 2
HW1	THREADED ROD 5/16" x 0.06" x 3 1/4"		8X	1 OF 2
HW2	SQUARE WASHER		8X	1 OF 2
HW3	HEX NUT		8X	1 OF 2
HW4	HEX WRENCH	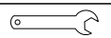	1X	1 OF 2
HW5	BOLT 6 x 1 x 50 MM		6X	1 OF 2
HW6	BOLT 6 x 1 x 35 MM		8X	1 OF 2
HW7	SPRING WASHER Ø13 x 1 MM		14X	1 OF 2
HW8	FLAT WASHER Ø16 x 1 MM		14X	1 OF 2
HW9	L KEY		1X	1 OF 2
HW10	DOWEL		8X	1 OF 2
HW11	ROUND HEAD SCREW 4 x 1 x 25 MM		16X	1 OF 2

SAFAVIEH COUTURE

Model# SFV1327-Q
Product Dimensions: 64"W x 85 3/4"D x 34"H

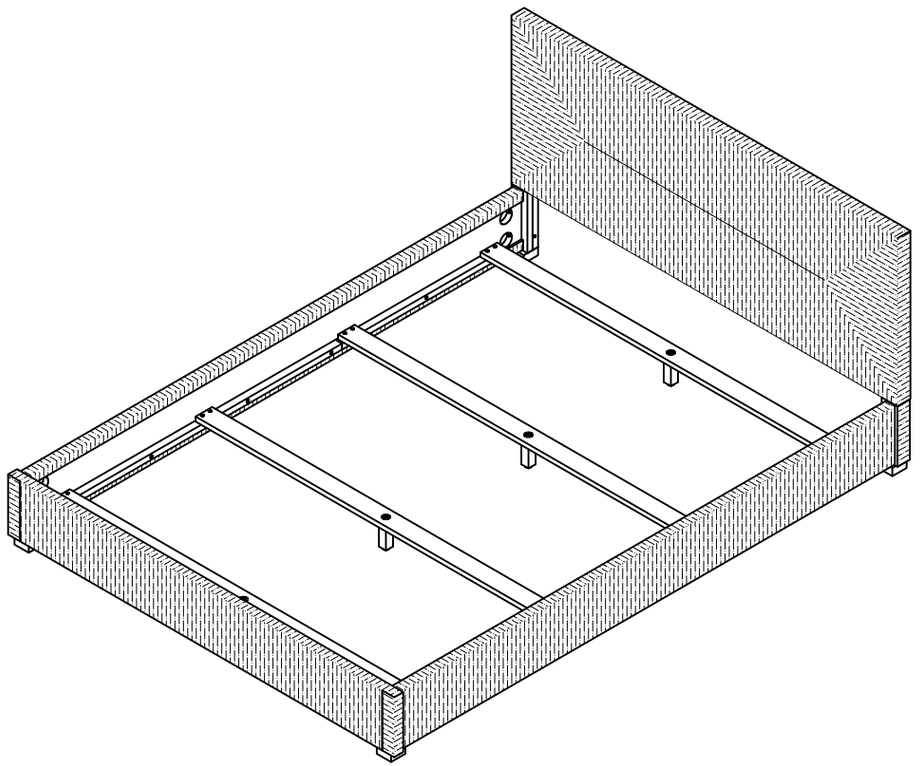

⚠ WARNING ⚠

WEIGHT CAPACITY: 400 LBS
WARNING: DO NOT STAND ON THE BED
WARNING: DO NOT OVER TORQUE NUTS/SCREWS

PREPARATION

* Before beginning assembly of product, make sure all parts are present. Compare parts with part contents list and hardware contents list.
* If any part is missing or damaged, do not attempt to assemble the product.
* Estimated Assembly Time: 60 minutes.
* Tools Required for Assembly : Hex Wrench, L Key (included), Phillips screwdriver (not included)
* If you are having difficulty, our friendly Customer Care team is always here to help. Please email **customersupport@safavieh.com**

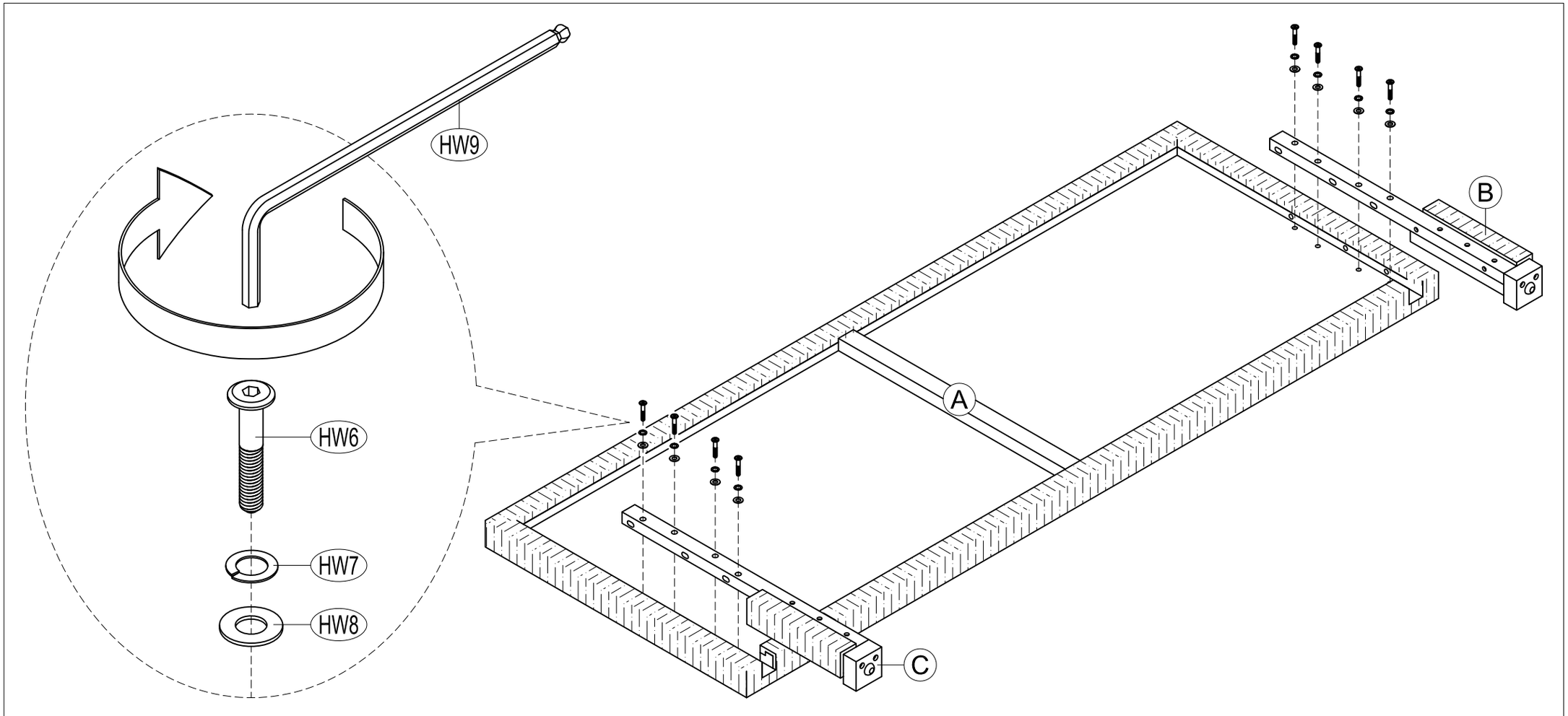

STEP 1 ATTACH HEADBOARD (A) TO LEFT AND RIGHT POSTS (B) AND (C) USING BOLTS 35 MM (HW6), SPRING WASHERS (HW7) AND FLAT WASHERS (HW8). TIGHTEN BOLTS USING L KEY (9).

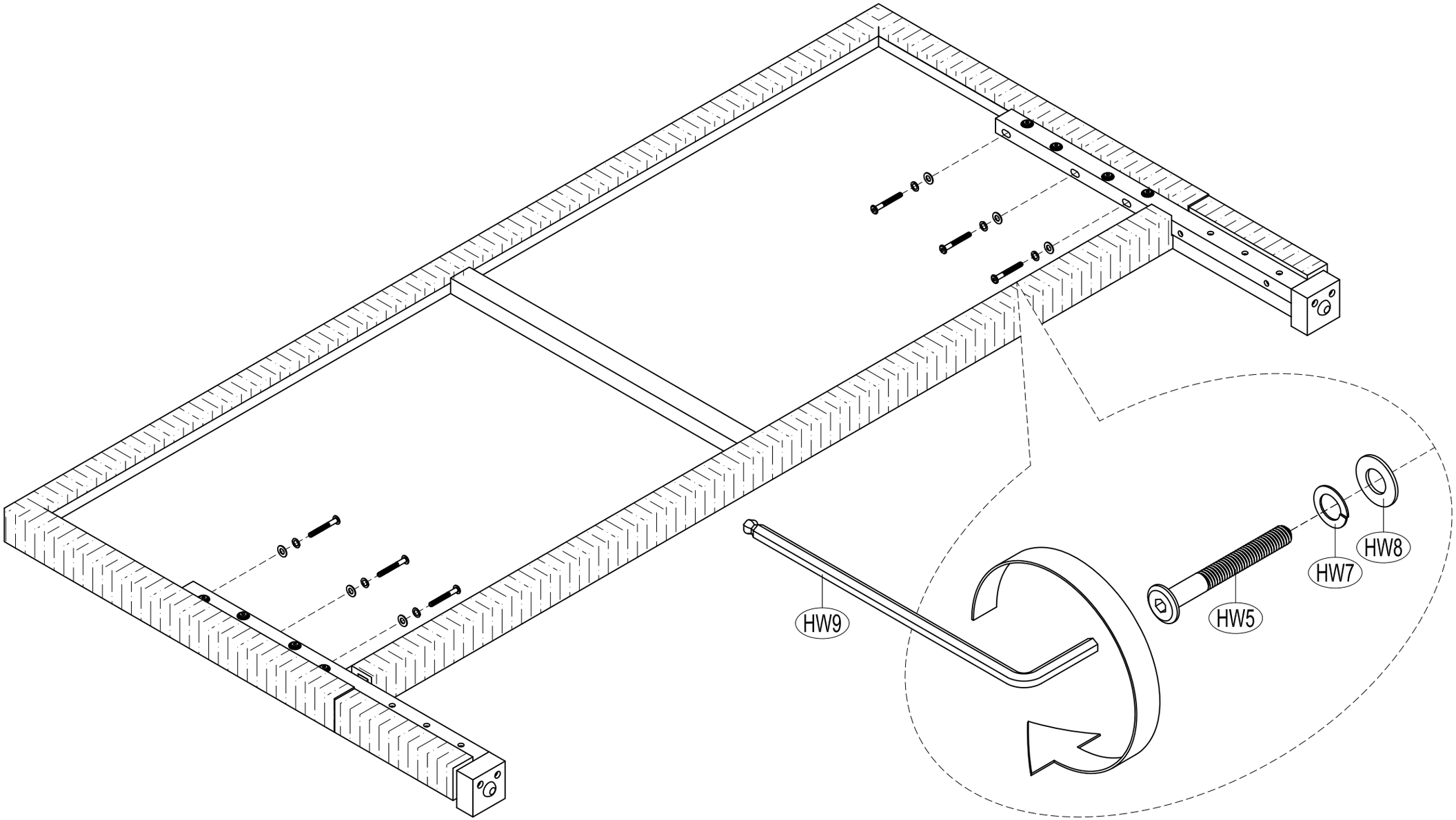

STEP 2 ATTACH BOLTS 50 MM (HW5), SPRING WASHERS (HW7) AND FLAT WASHERS (HW8) TO UNIT. TIGHTEN BOLTS USING L KEY (HW9).

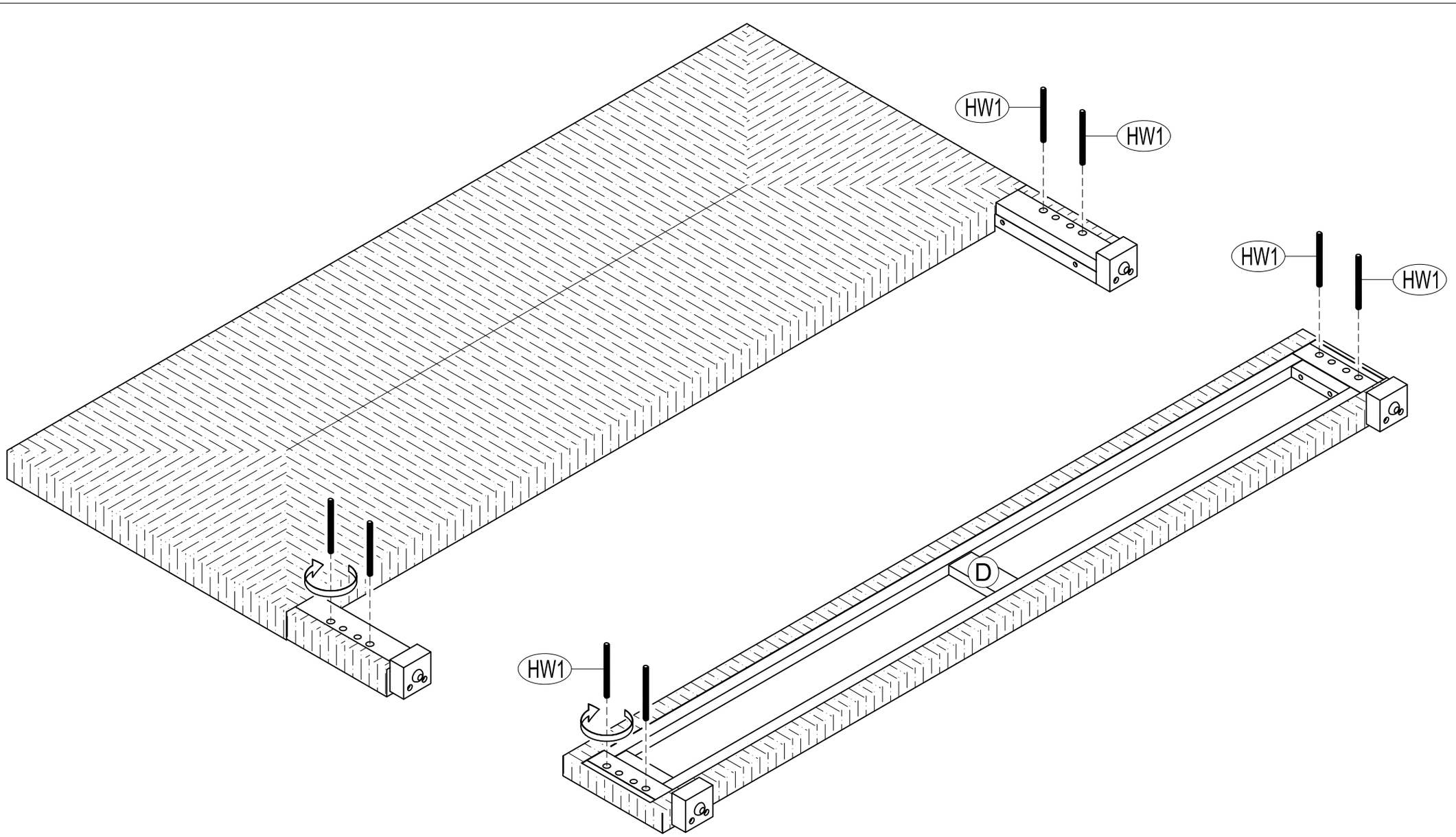

STEP 3 ATTACH THREADED RODS (HW1) TO THE HEADBOARD ASSEMBLY AND FOOTBOARD (D). TIGHTEN THE RODS.

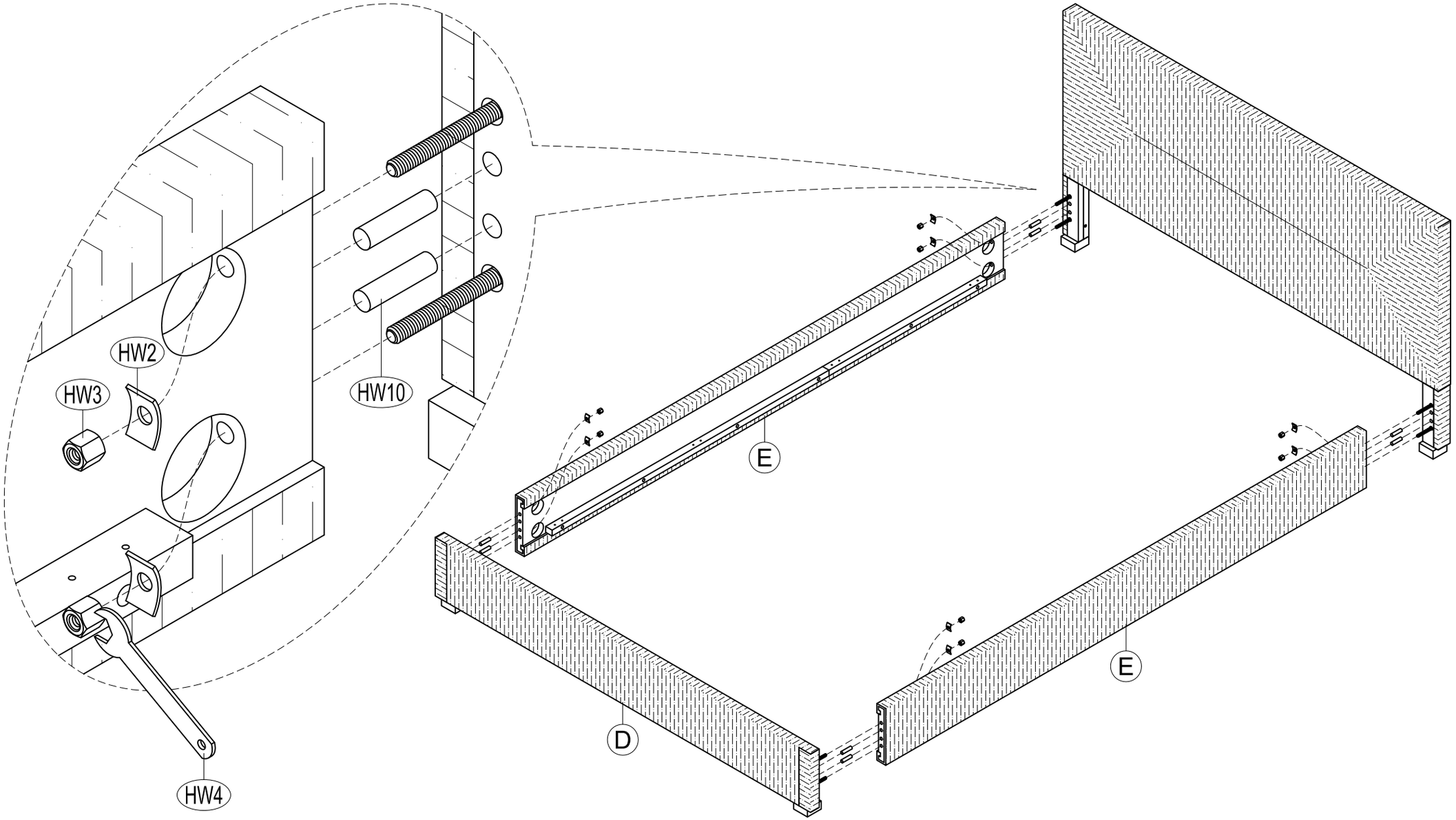

STEP 4 ATTACH SIDE RAILS (E) TO THE HEADBOARD ASSEMBLY AND FOOTBOARD (D) USING SQUARE WASHERS (HW2), HEX NUTS (HW3) AND DOWELS (HW10). TIGHTEN NUTS USING THE HEX WRENCH (HW4).

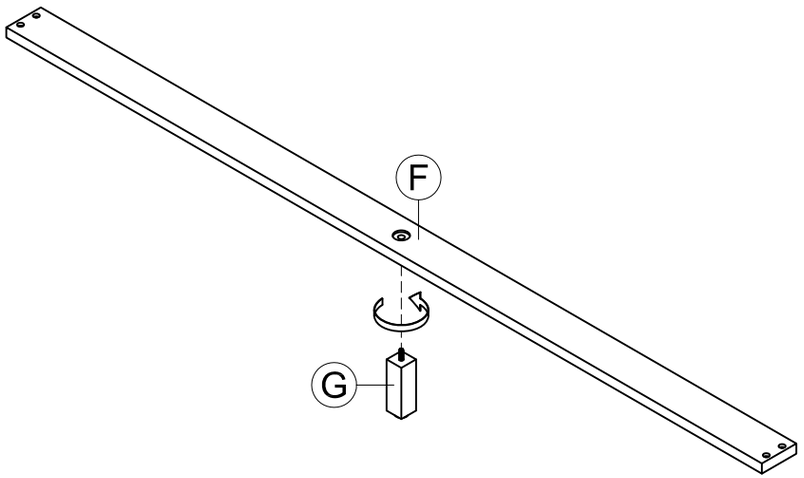

4X

STEP 5 SCREW IN CENTER LEGS (G) TO SLATS (F).

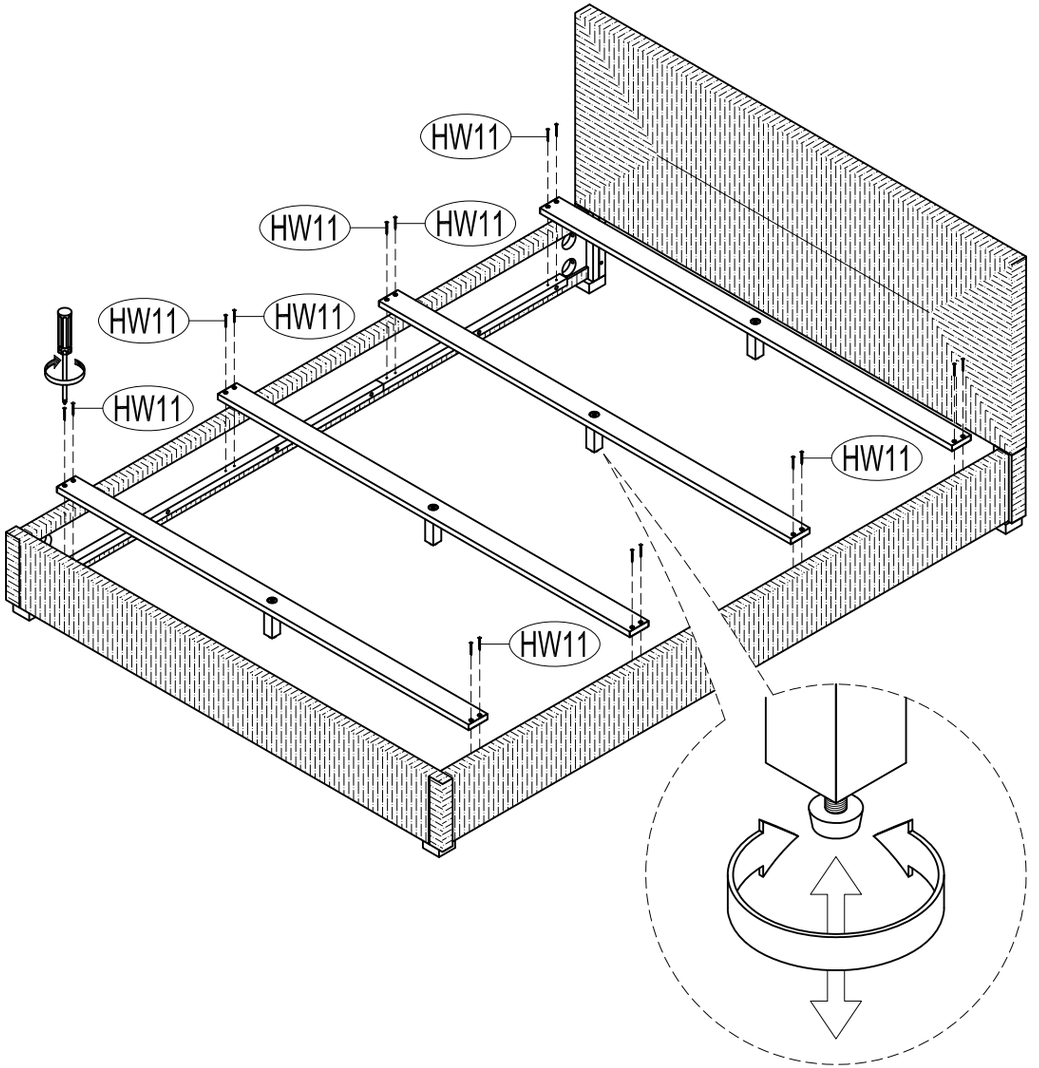

STEP 6 ATTACH THE SLATS TO THE SIDE RAILS BY SCREWING IN ROUND HEAD SCREWS 25 MM (HW11). LEVEL THE BED BY ADJUSTING THE ADJUSTABLE LEVELERS ON THE BOTTOM OF THE CENTER LEGS.