BARRYMORE REEDED WOOD BED

DESIGN#SFV2227

Assembly Instructions

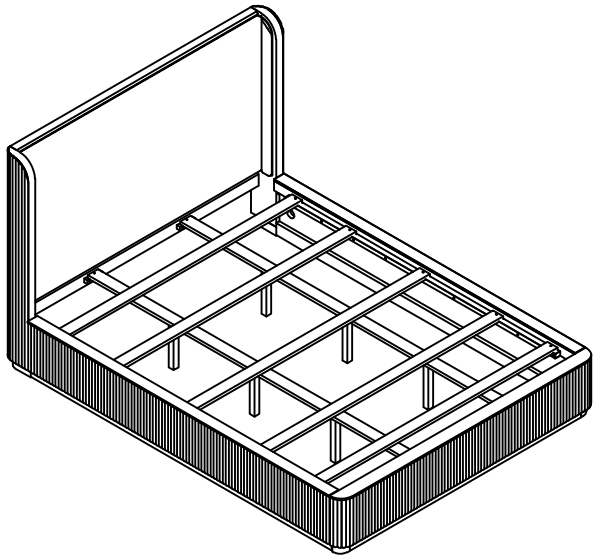

SAFAVIEH
COUTURE

Need help?
Feel free to contact us via email or call if you have any specific questions!

contact us:
cs@safavieh.com
866-422-9070

Thanks for bringing Safavieh Couture into your home

Everything we make is incredibly simple to set up, including your new bed. You won't need any additional tools.

PARTS LIST

A X 1
LEFT LEG OF HB

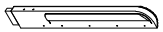

B X 1
RIGHT LEG OF HB

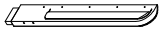

C X 1
HEADBOARD BAR OF HB



D X 1
HEADBOARD

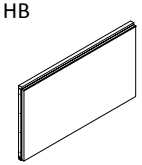

E X 1
FOOTBOARD

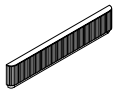

F X 5
SLAT



G X 6
SUPPORT LEGS

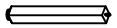

H X 2
CENTER SLAT



I X 2
SIDE RAIL

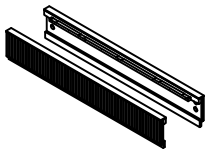

HARDWARE LIST

HW1 X 12
SCREW 8 x 1-¼"

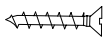

HW2 X 1
ALLEN KEY 5mm



HW3 X 10
WASHER 5⁄16"-19



HW4 X 10
HEX SOCKET BOLT 5⁄16" x 1-½"



HW5 X 8
BOLT 5⁄16"-18 x 3-½"



HW6 X 8
HALF MOON NUT 5⁄16"-30 x 15 x 7.5



HW7 X 18
SPLIT LOCK WASHER 5⁄16" x ½"



HW8 X 8
NUT 5⁄16"-18



HW9 X 1
WRENCH 13MM



1

Place the Headboard (D) upside down on a soft surface. Align the screw holes on the back of the Headboard (D) to the screw holes on the Left and Right Legs of HB (A&B). Place the Split Lock Washer (HW7) and Flat Washer (HW3) on the Hex Socket Bolt (HW4) in the order shown below. Attach the Headboard (D) to the Left and Right Legs of HB (A&B) by using the Allen Key (HW2) to screw in the bolts.

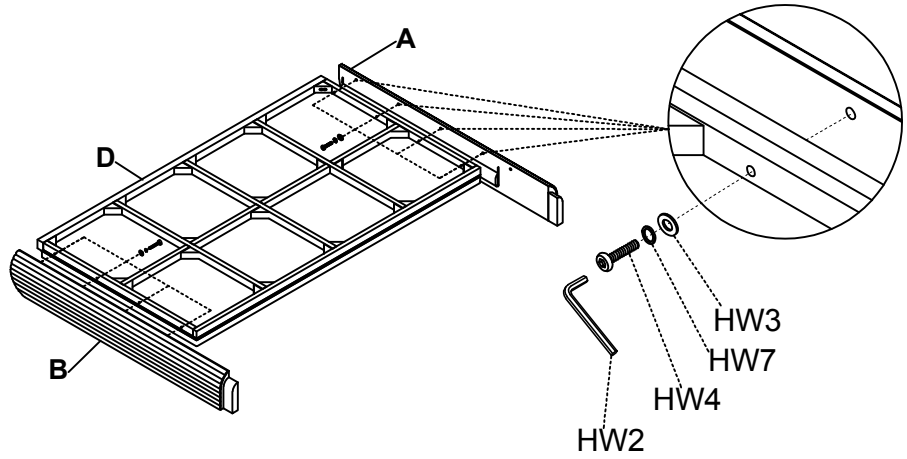

2

Align the screw holes on the Headboard Bar (C) to the screw holes on the Left and Right Legs of HB (A&B). Place the Split Lock Washer (HW7) and Flat Washer (HW3) on the Hex Socket Bolt (HW4) in the order shown below. Attach the Headboard Bar (C) to the Left and Right Legs of HB (A&B) by using the Allen Key (HW2) to screw in the bolts.

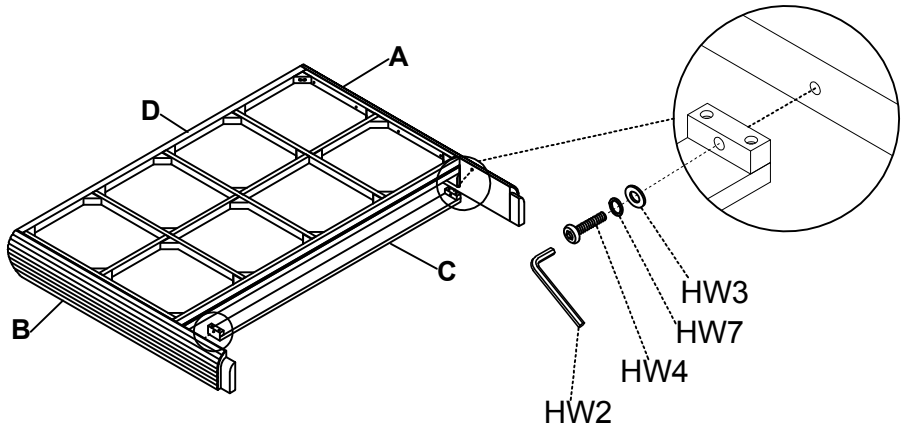

3

Attach the siderails (I) to the Left and Right Legs of HB (A&B) by inserting the Bolts (HW5) into the bolt holes as shown below. Place the Half Moon Nut (HW6), Split Lock Washer (HW7), and Nut (HW8) on the Bolt (HW5) in the order shown below. Use the Wrench (HW9) to screw on the Nut (HW8). Repeat this step to attach the Footboard (E) to the other end of the siderails (I).

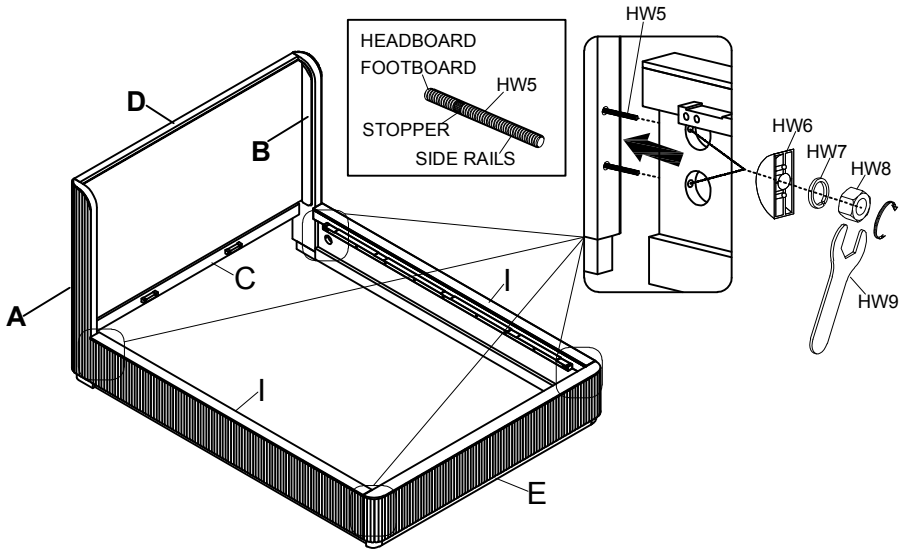

4

Screw the Support Legs (G) into the Center Slats (H).

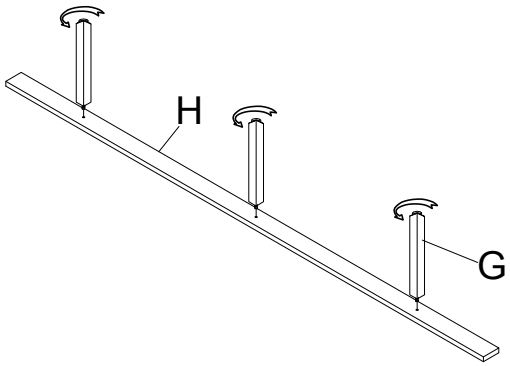

5

Attach the Center Slats (H) to the inside wood bar on the Headboard bar (C) and the Footboard (E) by using a Philips head screwdriver (not included) to screw in the Screws (HW1) in the places shown below.

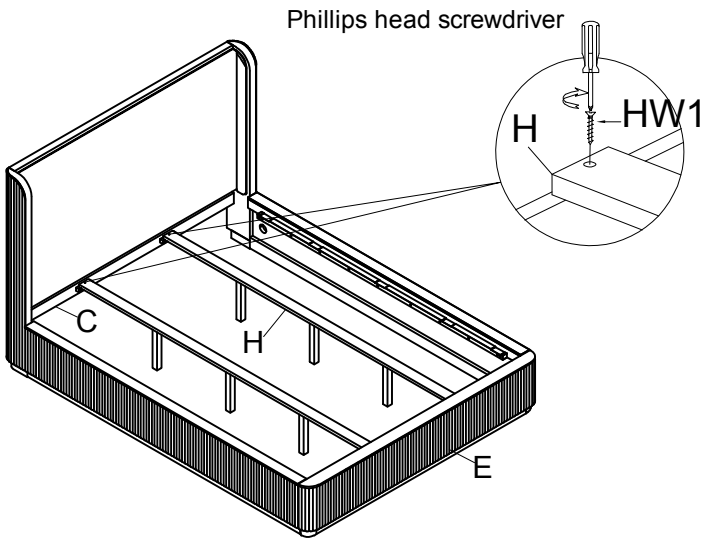

6

Attach the Slats (F) to the inside wood bar on the Siderails (I) by using a Philips head screwdriver (not included) to screw in the Screws (HW1) in the places shown below.

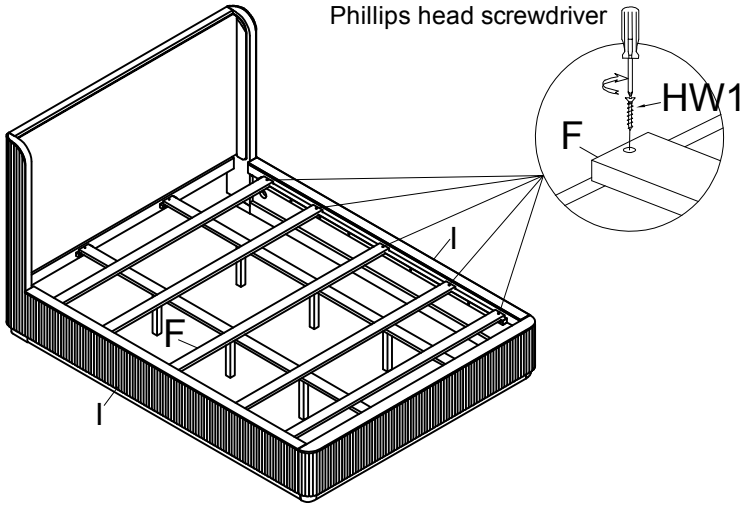

7

Place the Bed in the place where you will use it. We'd love to see it- just tag us (we're @safavieh) and use the hashtag #safavieh on Instagram!

