JOSEPHINA BURL WOOD 6 DRAWER DRESSER

DESIGN# SFV2249

Assembly Instructions

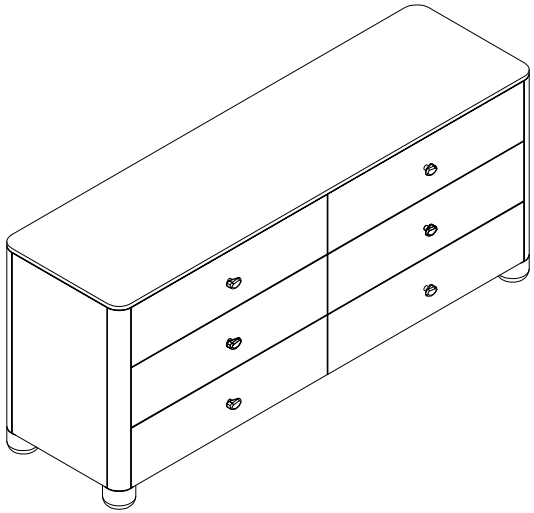

SAFAVIEH
COUTURE

Need help?
Feel free to contact us via email or call
if you have any specific questions!

contact us:

cs@safavieh.com
866-422-9070

Thanks for bringing Safavieh Couture into your home

Everything we make is incredibly simple to set up, including your new dresser. You won't need any additional tools.

Parts List

A X 1
Cabinet

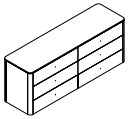

B X 5
Legs



Hardware List

HW1 x 2
Anti-Tip Hardware



1

Open the drawer and remove the Legs (B).

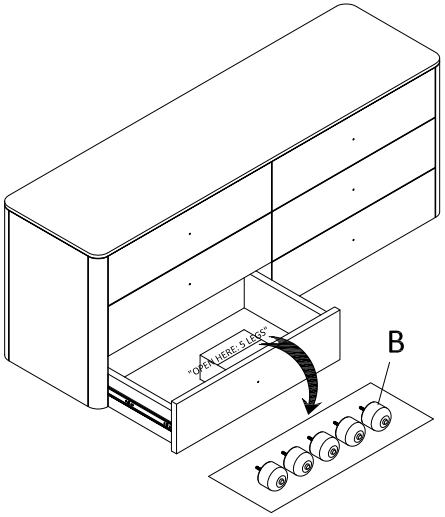

2

Place the Cabinet (A) upside down on a soft and clean surface. Screw the 5 Legs (B) in a clock wise direction into the screw hole on the bottom of the Cabinet (A).

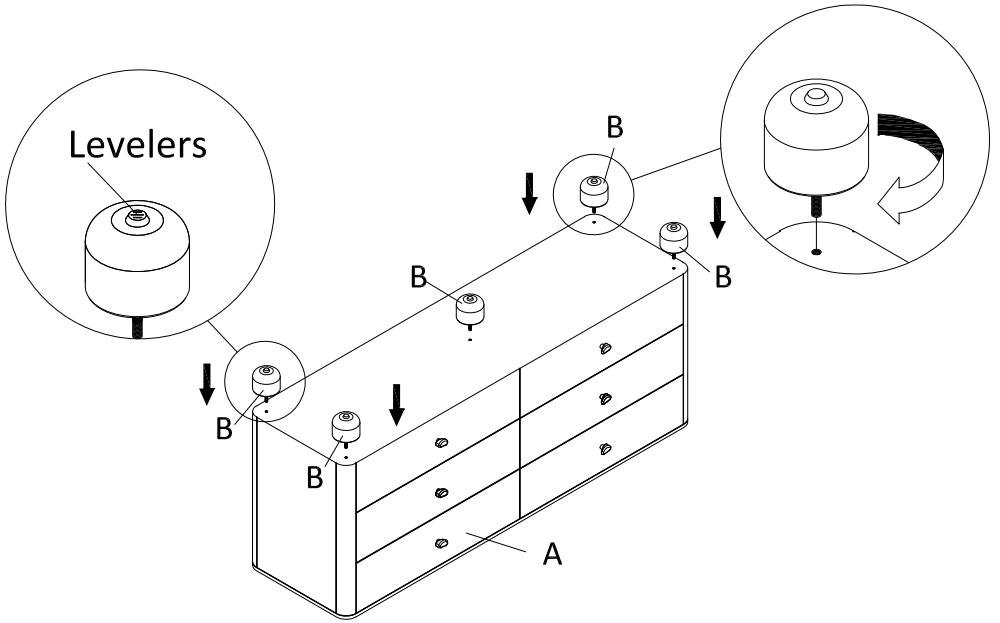

3

Turn the Dresser upright. Place the Dresser in the place where you will use it. Follow the installation instructions of the 2*Anti-Tip Hardware (HW1) to attach the product to the wall. Adjust the levelers on the bottom of the legs as needed to make the Dresser level. We'd love to see it - just tag us (we're @safavieh) and use the hashtag #safavieh on Instagram!

