TAZMYN BARSTOOL

DESIGN #SFV4159

Assembly Instructions

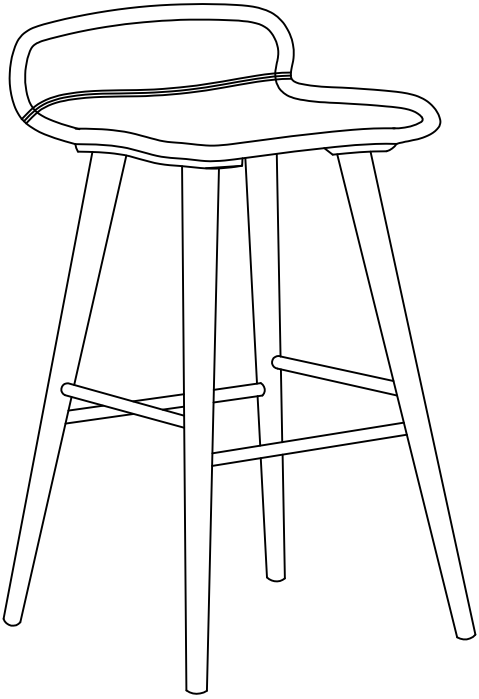

SAFAVIEH
COUTURE

Thanks for bringing Safavieh Couture into your home

Everything we make is incredibly simple to set up, including your new barstool. You won't need any additional tools.

Parts List

A x 1
SEAT

B x 1
LEFT LEG

C x 1
RIGHT LEG

D x 2
STRETCHER

Hardware List

HW1 x 10
Bolt M6x35mm

HW2 x 10
Spring washer 6x10mm

HW3 x 10
Flat washer 6x14mm

HW4 x 1
Allen key

HW5 x 4
Screw 4x40mm

1

Place the Legs (B&C) upside down on a soft surface. Align the Stretchers (D) to the screw holes in the Legs (B&C). Attach them by using a Philips Head Screwdriver (not included) to screw in the Screws (HW5) as shown.

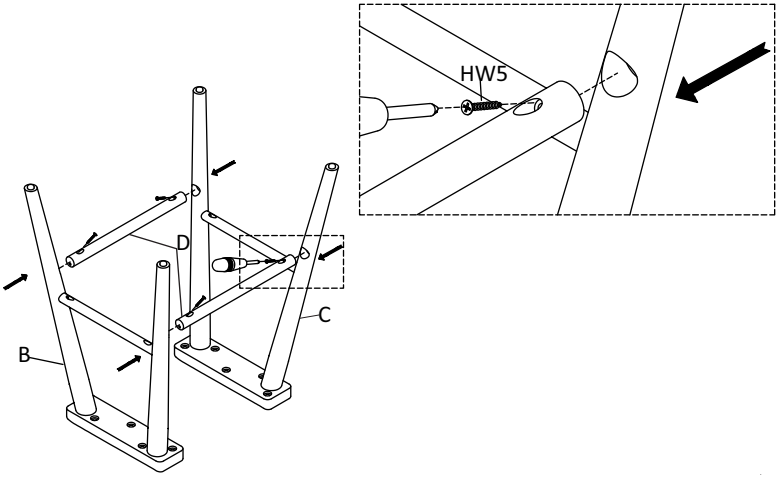

2

Place the Seat (A) upside down on a soft surface. Align the screw holes on the top of the Legs (B&C) to the screw holes on the bottom of the Seat (A). Place the Spring washers (HW2) and the Flat washers (HW3) on the Bolts (HW1). Attach the Legs (B&C) to the Seat (A) by using the Allen Key (HW4) to screw in the Bolts (HW1) with the washers as shown.

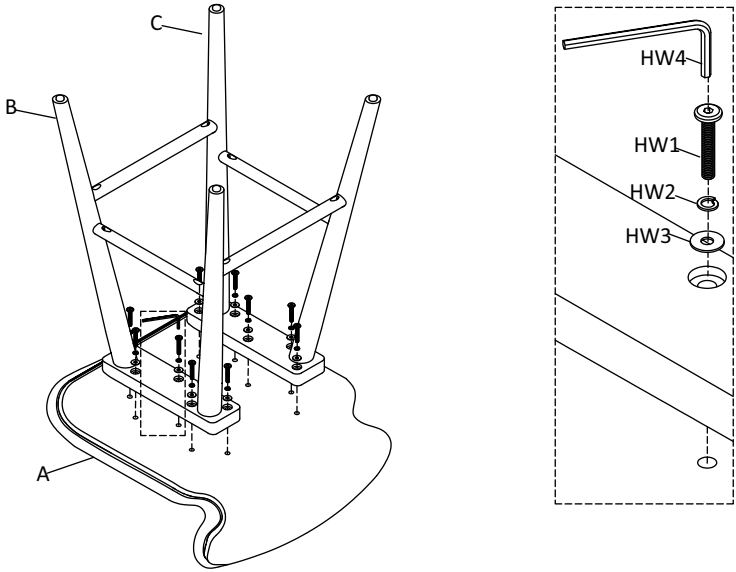

3

Place the barstool in the place where you will use it. We'd love to see it – just tag us (we're @safavieh) and use the hashtag #safavieh on Instagram!

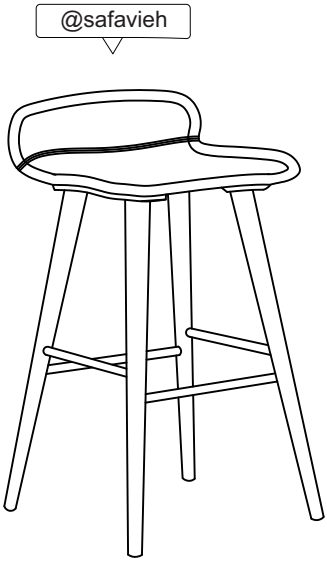

Need help?
Feel free to contact us via email or call
if you have any specific questions!
contact us:
cs@safavieh.com
866-422-9070