PORTMAN WOOD DINING CHAIR

DESIGN# SFV4211

Assembly Instructions

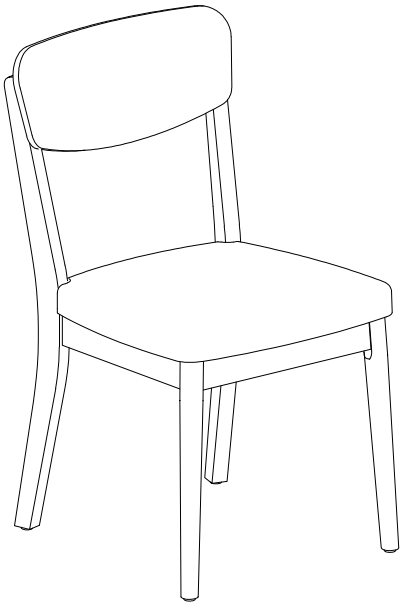

SAFAVIEH
COUTURE

Thanks for bringing Safavieh Couture into your home

Everything we make is incredibly simple to set up, including your new chair. You won't need any addional tools.

Parts List

A x 1
SEAT FRAME

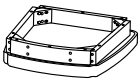

B x 1
BACK CHAIR



C x 1
LEFT FRONT LEG



D x 1
RIGHT FRONT LEG



Hardware List

HW1 x 4
Bolt M6x40mm



HW2 x 4
Bolt M6x70mm



HW3 x 8
Spring washer M6x10mm



HW4 x 8
Flat Washer M6x14mm



HW5 x 4
Nut 8mm



HW6 x 4
Spring washer M8x14mm



HW7 x 4
Flat Washer M8x18mm



HW8 x 1
Allen key



HW9 x 1
Wrench



1

Assemble the left front leg (C) and right front leg (D) into Seat frame (A) by using Nut (HW5), Spring washer (HW6), Flat washer (HW7) by Wrench (HW9).

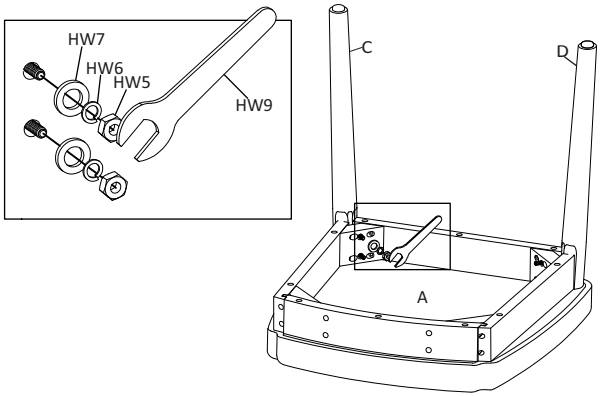

2

Assemble the Back chair (B) into Seat frame (A) by using Bolt (HW1), Bolt (HW2), Spring washer (HW3), Flat washer (HW4) by Allen key (HW8).

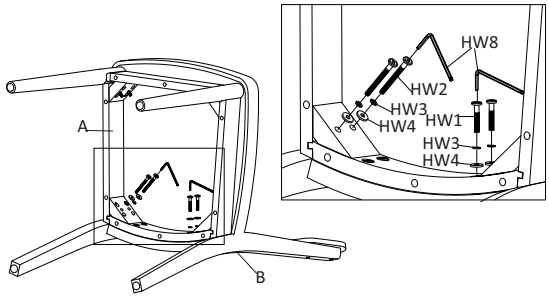

3

Place the chair in the position you use. We'd love to see it — just tag us (we're @safavieh) and use the hashtag #safavieh on Instagram!

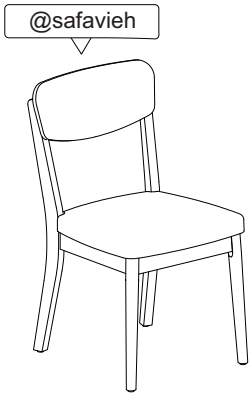

Need help?
Feel free to contact us via email or call
if you have any specific questions!
contact us:
cs@safavieh.com
866-422-9070