GABRIBECCA WOOD 6 DRAWER DRESSER

DESIGN #SFV4280

Assembly Instructions

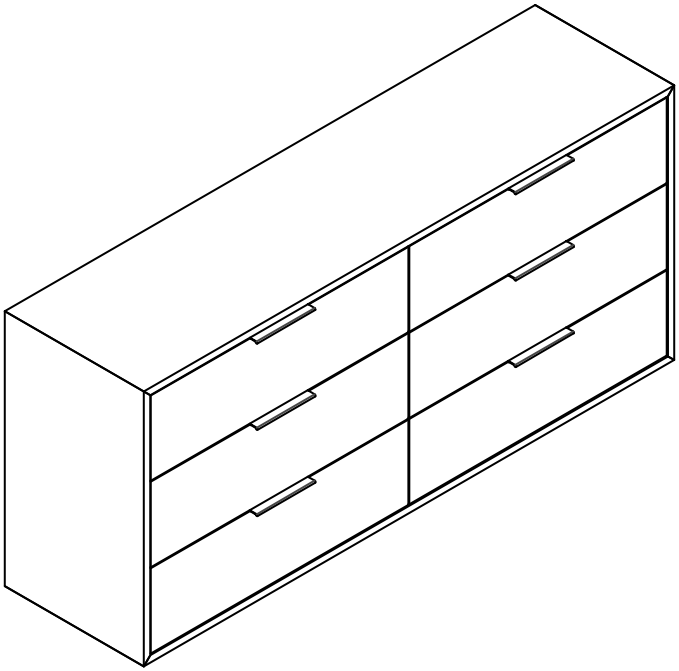

SAFAVIEH
COUTURE

Thanks for bringing Safavieh Couture into your home

Everything we make is incredibly simple to set up, including your new dresser. You won't need any additional tools.

Parts List

A x 1
DRESSER

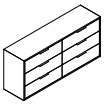

Hardware List

HW1 x 4
Plastic Brackets



HW2 x 2
Restraint straps



HW3 x 4
Screws 4x20mm



HW4 x 4
Plastic anchors



HW5 x 4
Screws 4x40mm

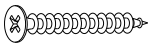

1

To help prevent the possibility of tipping over, install the tip over restraint kit provided.

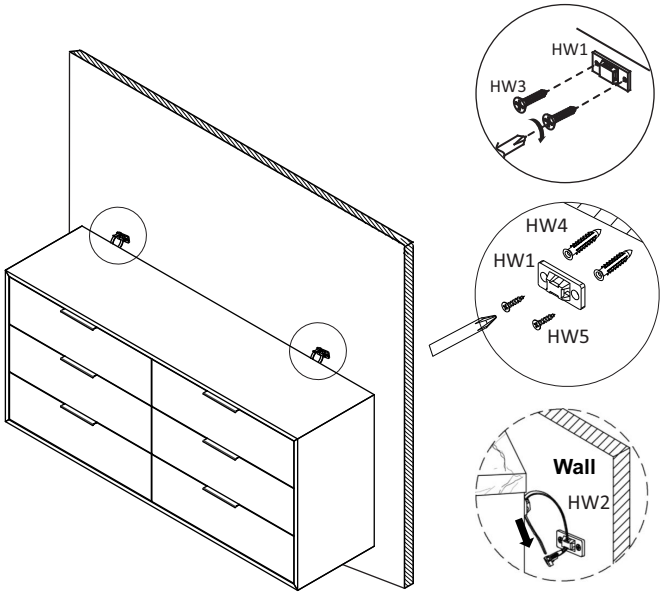

2

Place the dresser in the place where you will use it. We'd love to see it – just tag us (we're @safavieh) and use the hashtag #safavieh on Instagram!

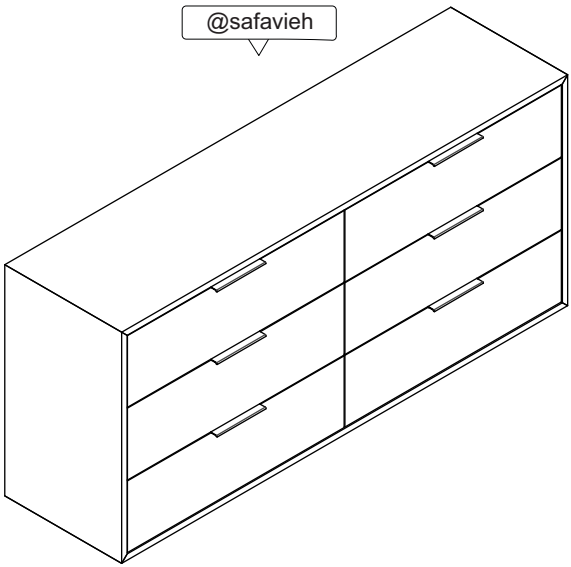

Need help?
Feel free to contact us via email or call
if you have any specific question!
contact us:
cs@safavieh.com
866-422-9070