# BECKALYNN WOOD BACK DINING CHAIR

DESIGN #SFV4292

Assembly Instructions

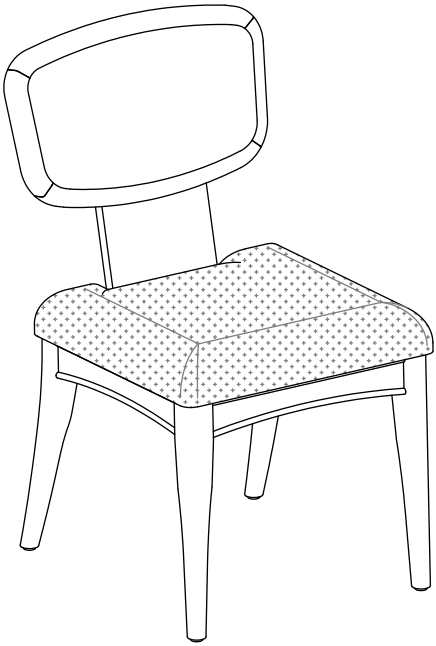

SAFAVIEH
COUTURE

# Thanks for bringing Safavieh Couture into your home

Everything we make is incredibly simple to set up, including your new chair. You won't need any additional tools.

**Parts List**

A x 1
CHAIR BACK

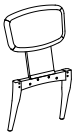

B x 1
SEAT FRAME

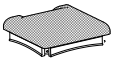

C x 2
FRONT LEGS (L&R)



**Hardware List**

HW1 x 4
Bolt M6x80mm



HW2 x 4
Bolt M6x40mm



HW3 x 8
Spring washer M6x10mm



HW4 x 8
Flat Washer M6x16mm



HW5 x 4
Nut 8mm



HW6 x 4
Spring washer M8x14mm



HW7 x 4
Flat Washer M8x18mm



HW8 x 1
Allen key



HW9 x 1
Wrench



## 1

Place the Chair Back (A) upside down on a soft and clean surace. Align the screw holes on the back of the Seat (B) to the screw holes on the Chair Back (A). Place the Spring Washers (HW3) and Flat Washers (HW4) on the Bolts (HW1), Bolts (HW2) in the order shown below. Use the Allen Key (HW8) to screw in the 8 Bolts in the spots shown below.

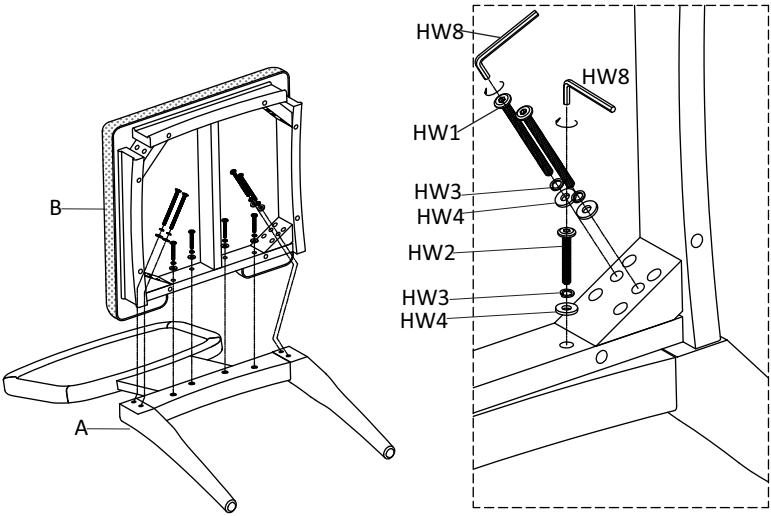


## 2

Insert the screws on the Legs (C) into the screw holes in the front of the Seat Frame (B). Place the Flat Washer (HW7), Spring Washer (HW6), and the Nut (HW5) on the screws. Use the Wrench (HW9) to screw on the Nut as shown below.

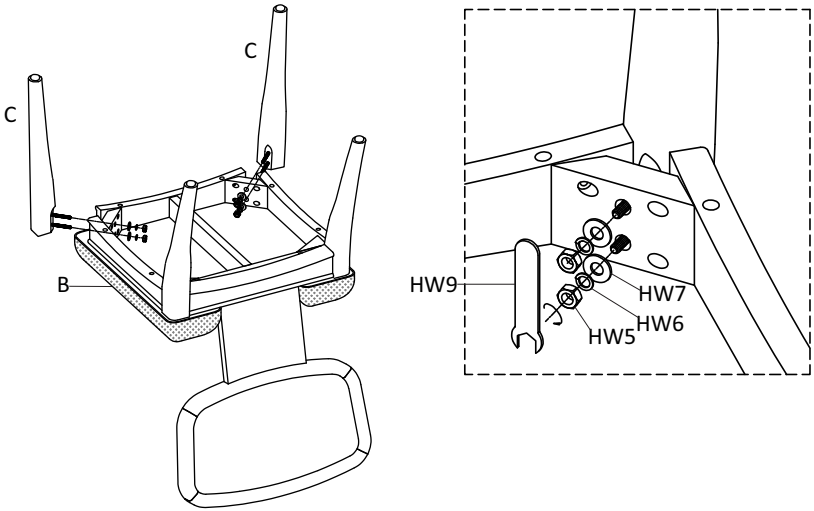

## 3

Place the chair in the place where you will use it. We'd love to see it – just tag us (we're @safavieh) and use the hashtag #safavieh on Instagram!

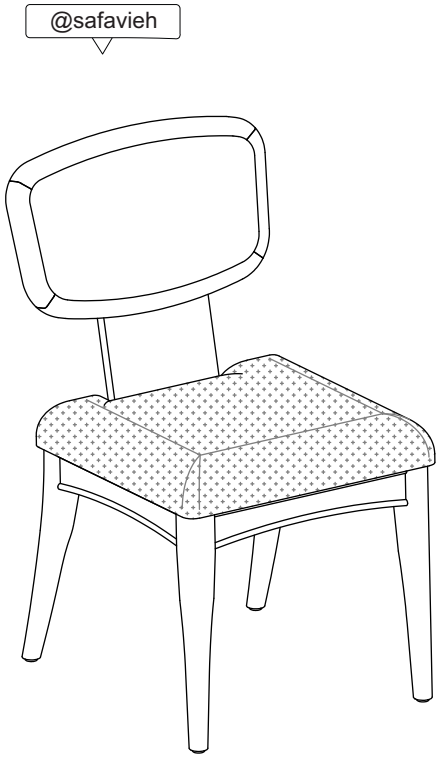

**Need help?**
Feel free to contact us via email or call
if you have any specific questions!
**contact us:**
cs@safavieh.com
866-422-9070