NOTICE

* Please make sure that you have all parts indicated and they are in good condition before you begin assembly of this item. Refer to part list and hardware list below for guidance.
* This item should be assembled on a soft surface to prevent scratching the finish during assembly.
* This item may require periodic tightening.
* If you are having difficulty, our friendly Customer Care team is always here to help. Please email **customersupport@safavieh.com**

PREPARATION

* Before beginning assembly of product, make sure all parts are present. Compare parts with part contents list and hardware contents list.
* If any part is missing or damaged, do not attempt to assemble the product.
* Estimated Assembly Time: 10 minutes.
* Tools Required for Assembly (included): Allen Key

CARE AND MAINTENANCE

* Spot clean using a mild water-free solvent. Only a professional cleaner should undertake a complete overall cleaning.
* The use of steam or water-based cleaners may cause excessive shrinking or staining.

Part List and Hardware List

PIECE	DESCRIPTION	PICTURE	QUANTITY
A	Sectional Loveseat Seat	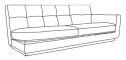	1X
B	Leg		4X
HW1	Split Lock washer(M6)		8X
HW2	Flat Washer(M6)		8X
HW3	Socket Screws 6*1.05*65MM		8X
HW4	Allen Key		1X
HW5	Clip		1X
HW6	Screw		4X

SAFAVIEH

COUTURE

Model#: SFV4730-1/2

Dimensions: 61.4"W*33.1"D*32.7"H

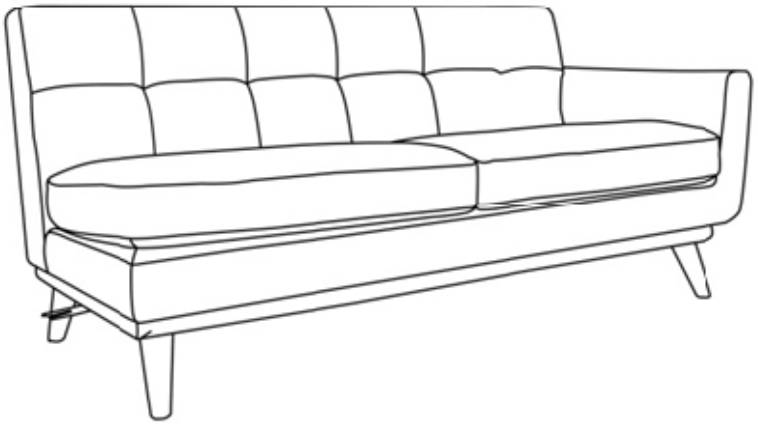

WARNING

Weight Capacity: 550 lbs

WARNING: DO NOT STAND ON SOFA

WARNING: DO NOT OVER TORQUE BOLTS/SCREWS

NOTICE

* Please make sure that you have all parts indicated and they are in good condition before you begin assembly of this item. Refer to part list and hardware list below for guidance.
* This item should be assembled on a soft surface to prevent scratching the finish during assembly.
* This item may require periodic tightening.
* If you are having difficulty, our friendly Customer Care team is always here to help. Please email **customersupport@safavieh.com**

PREPARATION

* Before beginning assembly of product, make sure all parts are present. Compare parts with part contents list and hardware contents list.
* If any part is missing or damaged, do not attempt to assemble the product.
* Estimated Assembly Time: 10 minutes.
* Tools Required for Assembly (included): Allen Key

CARE AND MAINTENANCE

* Spot clean using a mild water-free solvent. Only a professional cleaner should undertake a complete overall cleaning.
* The use of steam or water-based cleaners may cause excessive shrinking or staining.

Part List and Hardware List

PIECE	DESCRIPTION	PICTURE	QUANTITY
A	Sectional Chaise Seat		1X
B	Leg		4X
HW1	Split Lock Washer(M6)		8X
HW2	Flat Washer(M6)		8X
HW3	Socket Screws 6*1.05*65MM		8X
HW4	Allen Key		1X
HW5	Clip post		1X
HW6	Screw		5X

SAFAVIEH

COUTURE

Model#: SFV4730-2/2

Dimensions: 33.9"W*66.1"D*32.7"H

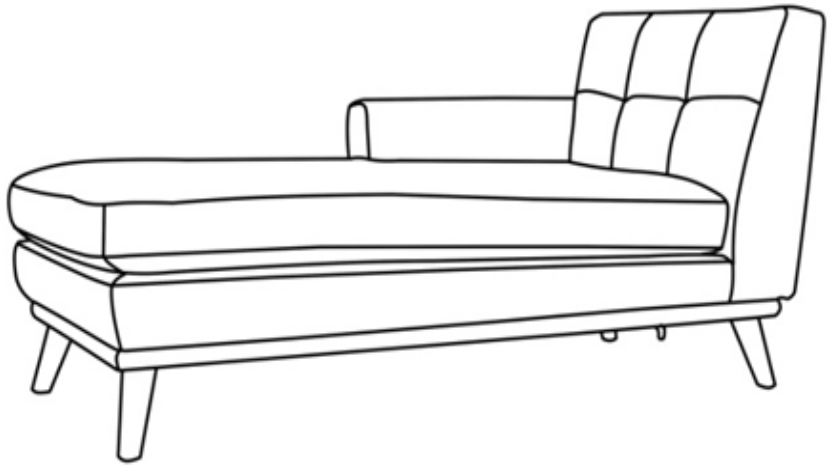

WARNING

Weight Capacity: 550 lbs

WARNING: DO NOT STAND ON CHAISE

WARNING: DO NOT OVER TORQUE BOLTS/SCREWS

PREPARATION

* Before beginning assembly of product, make sure all parts are present. Compare parts with part contents list and hardware contents list.
* If any part is missing or damaged, do not attempt to assemble the product.
* Estimated Assembly Time: 10 minutes.
* Tools Required for Assembly (included): Allen Key
* If you are having difficulty, our friendly Customer Care team is always here to help. Please email **customersupport@safavieh.com**

SFV4730-1/2

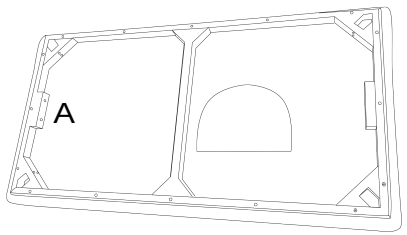	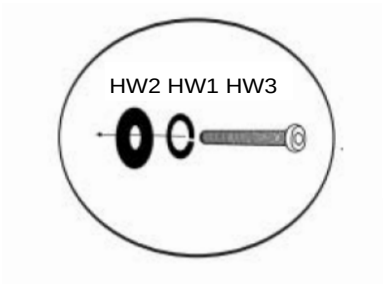	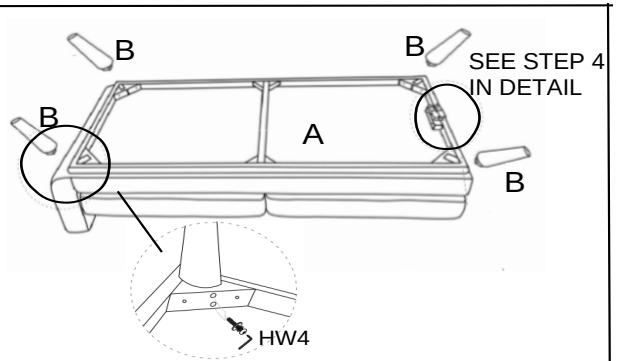
STEP1 OPEN THE ZIPPER ON THE UNDERSIDE OF THE SEAT, TAKE OUT LEGS AND HARDWARE	STEP2 PUT THE WASHERS ON THE SCREW IN THE ORDER SHOWN IN THE PICTURE.	STEP3 INSERT THE LEGS AND SCREW INTO THE HOLES AND TIGTHEN THE SCREWS BY USING ALLEN KEY
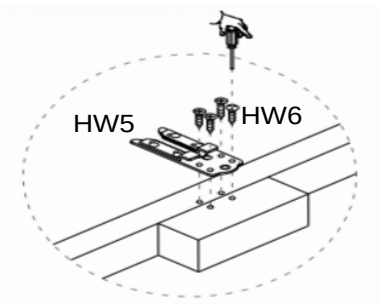	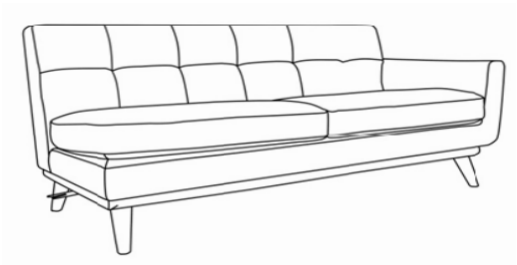	
STEP4 SECURE CLIP TO THE BOTTOM OF SEAT BY USING 4PCS SCREWS. TIGHTEN ALL SCREWS WITH A PHILLIPSS HEAD SCREWDRIVER (NOT INCLUDED).	STEP5 CLOSE THE ZIPPER ON THE UNDERSIDE OF THE SEAT AND PUT THE LOVESEAT UPRIGHT	

PREPARATION

* Before beginning assembly of product, make sure all parts are present. Compare parts with part contents list and hardware contents list.
* If any part is missing or damaged, do not attempt to assemble the product.
* Estimated Assembly Time: 10 minutes.
* Tools Required for Assembly (included): Allen Key
* If you are having difficulty, our friendly Customer Care team is always here to help. Please email **customersupport@safavieh.com**

SFV4730-2/2

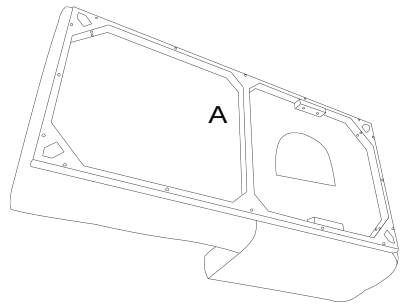	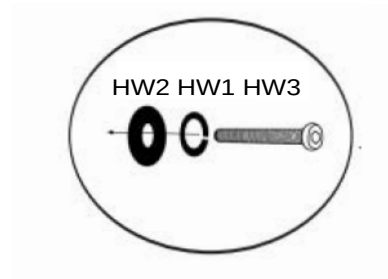	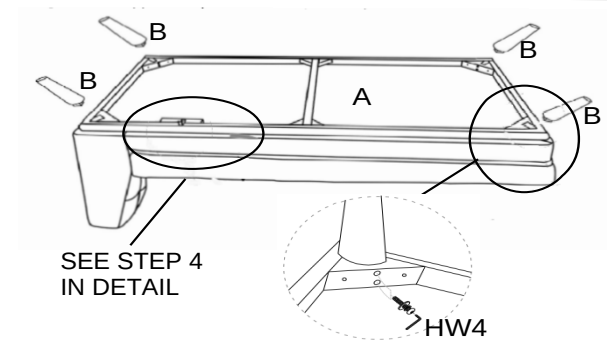
STEP1 OPEN THE ZIPPER ON THE UNDERSIDE OF THE SEAT AND TAKE OUT LEGS AND HARDWARE	STEP2 PUT THE WASHERS ON THE SCREW IN THE ORDER SHOWN IN THE PICTURE.	STEP3 INSERT THE LEG AND SCREW INTO THE HOLES AND TIGHTEN THE SCREWS BY USING ALLEN KEY
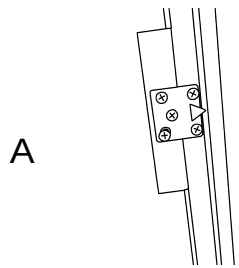	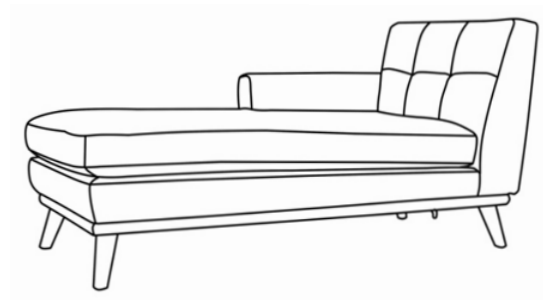	
STEP4 SECURE CLIP TO THE BOTTOM OF SEAT BY USING 5PCS SCREWS. TIGHTEN ALL SCREWS WITH A PHILLIPSS HEAD SCREWDRIVER (NOT INCLUDED).	STEP5 CLOSE THE ZIPPER ON THE UNDERSIDE OF THE SEAT AND PUT THE CHAISE UPRIGHT	

After assembly Loveseat and Chaise, please connect them as following steps:

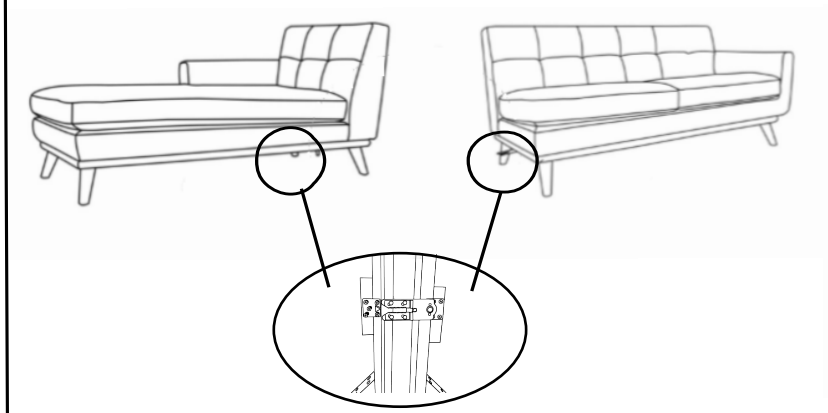	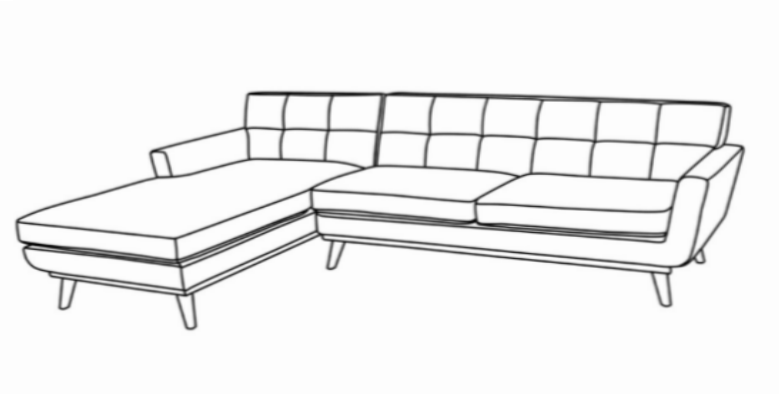
STEP1 Align the Clip on the bottom of sectional Loveseat to the Clip Posts on the bottom of Sectional Chaise as shown.	STEP2 Push the Loveseat close to Chaise slowly until the Clip and the Post click together tightly.
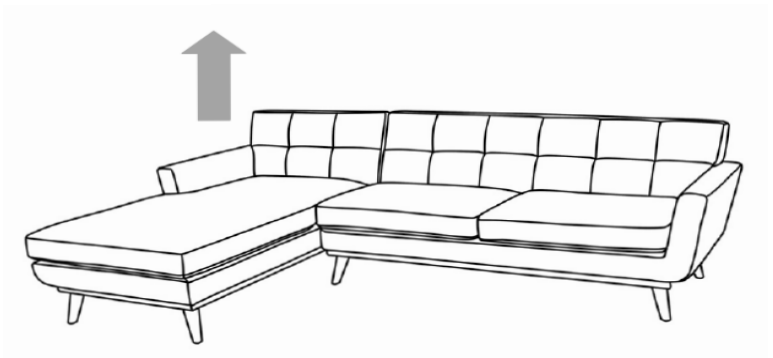	
If you want to unlock the sofa. Please lift up the Chaise by two people.	