## NOTICE

* Please make sure that you have all parts indicated and they are in good condition before you begin assembly of this item. Refer to part list and hardware list below for guidance.
* This item should be assembled on a soft surface to prevent scratching the finish during assembly.
* This item may require periodic tightening.
* If you are having difficulty, our friendly Customer Care team is always here to help. Please email **customersupport@safavieh.com**

## PREPARATION

* Before beginning assembly of product, make sure all parts are present. Compare parts with part contents list and hardware contents list.
* If any part is missing or damaged, do not attempt to assemble the product.
* Estimated Assembly Time: 15 minutes.
* This item may require periodic tightening.
* Tools Required for Assembly (included): Allen Key

## CARE AND MAINTENANCE

Always use felt pads under all articles to prevent discoloration or softening of the lacquer. Plastic and rubber bases on items can discolor wood. Wipe up spills immediately and avoid common hazards such as hot dishes,harsh solvents and abrasives. Cleaning should be done with a soft lint free cotton cloth dampened with water or furniture polish. On highly used surfaces we recommend applying a quality paste wax which should be used on a regular basis to provide additional protection from sratches and spills. How often you apply the wax depend on how much wear the furniture receives.

### Part List and Hardware List

| PIECE | DESCRIPTION | PICTURE | QUANTITY |
|---|---|---|---|
| A | 4 Drawer Wood Chest |  | 1x |
| HW1 | Metal Leg |  | 4x |
| HW2 | Allen Bolt: M6 x 1 x 20 mm |  | 16x |
| HW3 | Split Lock Washer: M6 |  | 16x |
| HW4 | Allen Key |  | 1x |

SAFAVIEH
COUTURE

**SFV5301A**
**DIMENSIONS: 30“L x 18“D x 44“H**

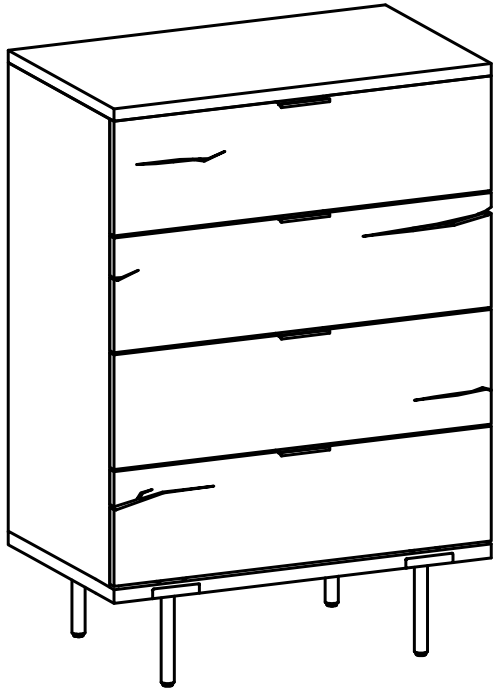

**⚠ WARNING ⚠**

**Weight Capacity - 200 LBS**
**Warning : Do not stand on Chest**
**Warning : Do not over torque bolts**

# PREPARATION

* Before beginning assembly of product, make sure all parts are present. Compare parts with part contents list and hardware contents list.
* If any part is missing or damaged, do not attempt to assemble the product.
* Estimated Assembly Time: 15 minutes.
* Tools Required for Assembly (included): Allen Key
* If you are having difficulty, our friendly Customer Care team is always here to help. Please email **customersupport@safavieh.com**

**1**

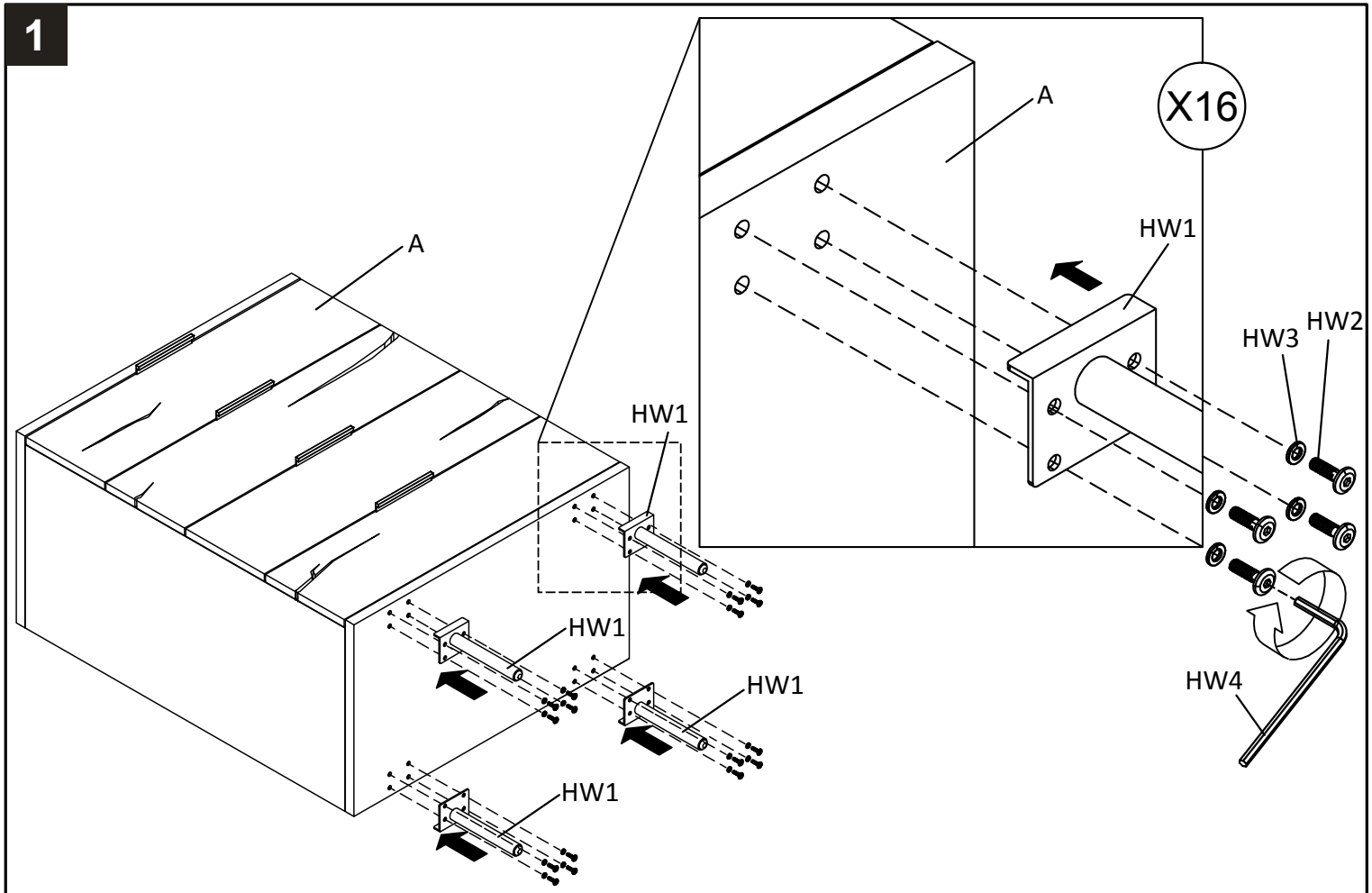


**Step 1:** Take all package off the chest. Attach the Metal Legs (HW1) to underneath of the chest, using Allen Key (HW4) to lock with Allen Bolt (HW2) and Split Lock Washer (HW3).

**2**

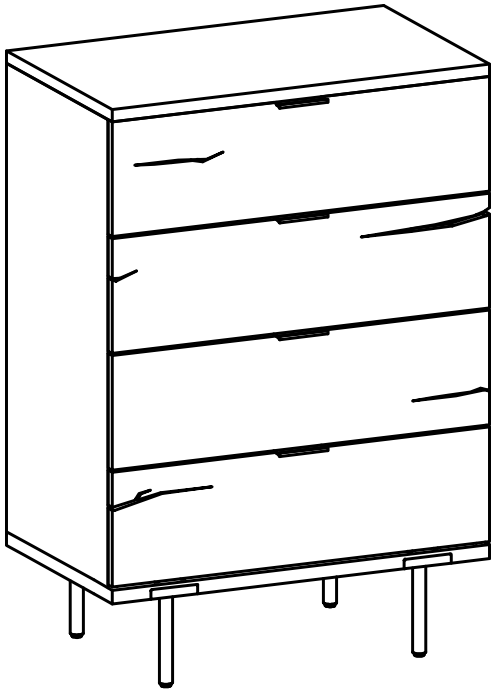

**Step 2:** Turn the chest up to front side, adjust the metal legs to make it stable.