NOTICE

* Please make sure that you have all parts indicated and are in good condition before you begin assembly of this item. Refer to part list and hardware list below for guidance .
* This item should be assembled on a soft surface to prevent scratching the finish during assembly.
* This item may require periodic tightening.
* If you are having difficulty, our friendly customer care team is always here to help . Please email **customersupport@safavieh.com**

SAFAVIEH
COUTURE

PREPARATION

* Before beginning assembly of product , make sure all parts are present . Compare parts with parts contents list and hardware contents list.
* If any part is missing or damaged, do not attempt to assemble the product.
* Estimated Assembly time : 15 minutes
* Tools Required for Assembly (included): Allen key

CARE AND MAINTENANCE

* MARBLE FURNITURE CARE Blot up spills immediately, use coasters on table tops under beverages.
* Use trivets or mats under hot dishes or cookware. Clean with warm water and dry surface immediately after cleaning.
* Do not use cleaners that contain acid such as bathroom cleaners, grout cleaner, and tile cleaners. Do not use abrasive cleaners in either dry or liquid forms. Use a cleaner and polish formulated for marble surfaces.

Item# **SFV5758A**
Product dimensions: 47"W* 18"D* 30"H

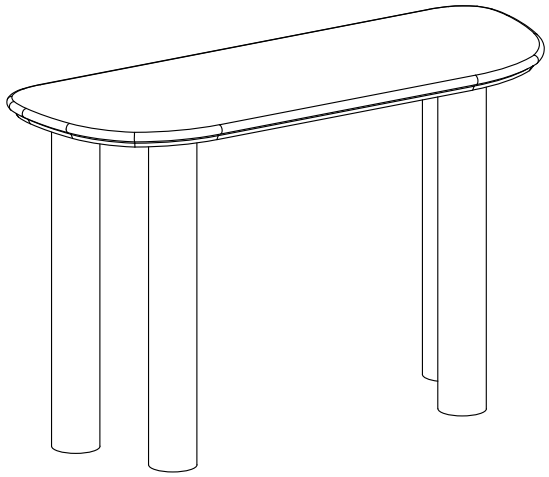

Part List and Hardware List

PIECE	DESCRIPTION	PICTURE	QUANTITY	Carton Call
A	Top	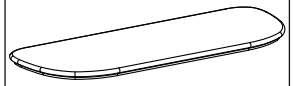	1X	1 of 2
B	Leg		4X	2 of 2
Hw1	Allen bolt 6 X 16 mm		16X	2 of 2
Hw2	Flat washer 16 x 8 mm		16X	2 of 2
Hw3	Allen key 4 mm		1X	2 of 2

⚠ WARNING ⚠

Weight Capacity - 110 LBS
Warning : Do not stand on Table
Warning : Do not over torque bolts.

PREPARATION

* Before beginning assembly of product , make sure all parts are present . Compare parts with parts contents list and hardware contents list.
* If any part is missing or damaged, do not attempt to assemble the product.
* Estimated Assembly time : 15 minutes
* Tools Required for Assembly (included): Allen key
* If you are having difficulty, our friendly Customer Care team is always here to help. Please email **customersupport@safavieh.com**

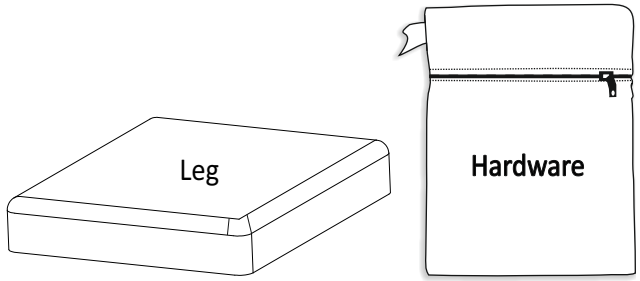

STEP1 Unwrap the legs & take out legs.
Open the hardware pouch & take out hardware.

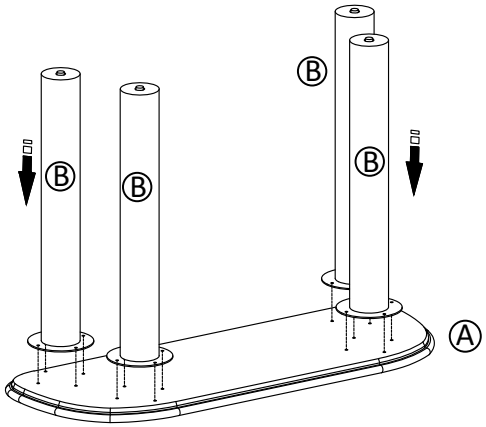

STEP2 Place the Table top (A) upside down on a clean, soft surface. Align the screw holes on the legs (B) with the screw holes on the top (A).

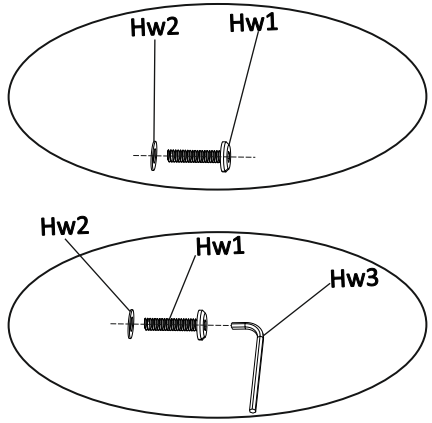

STEP3 Put the Flat washer(HW2) on the Allen Bolt (Hw1) as shown.

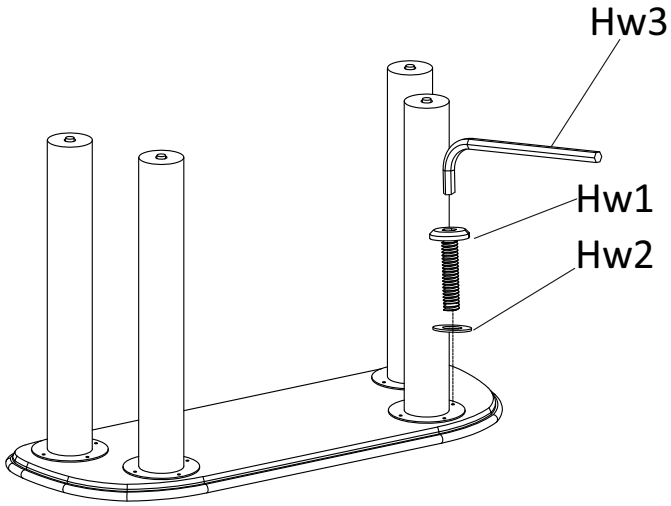

STEP4 Use the Allen Key (HW3) to screw in the Allen Bolts (HW1) with the Flat Washers (HW2) as shown.

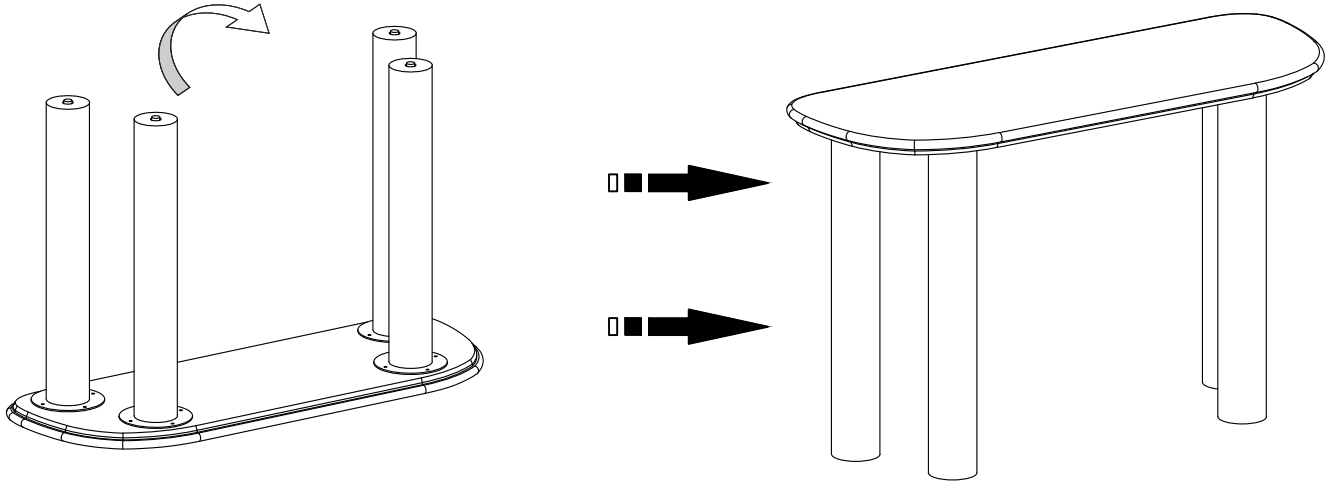

STEP4 Repeat steps 3-4 for the other 4 legs. Place the table upright.