GIANELLA WOOD AND METAL CHEST

DESIGN # SFV5792A

Handling & Care Instructions

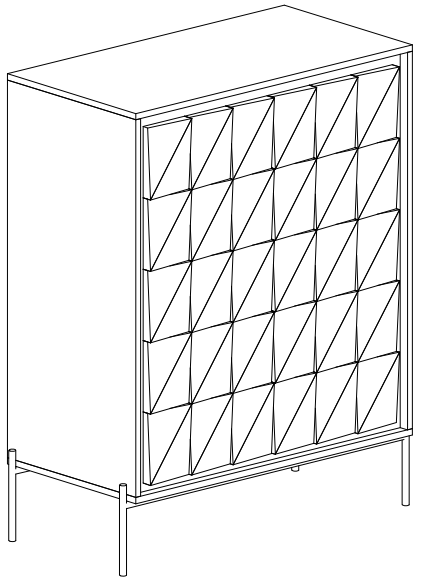

Need help?
Feel free to contact us via email or call
if you have any specific questions!

contact us:
cs@safavieh.com
866-422-9070

SAFAVIEH
COUTURE

Thanks for bringing Safavieh Couture into your home

Everything we make is incredibly simple to set up, including your bar cabinet. you won't need any additional tools.

Parts List

A x 1
CABINET



B x 1
LEG FRAME



Hardware List

HW1 x 8
Allen bolt 16x6MM



HW2 x 8
Flat washer 16x8MM



HW3 x 1
Allen Key 4MM



1

Place the cabinet (A) backside down on a clean surface. Align the screw holes on the base (B) to the screw holes on the bottom of the cabinet (A).

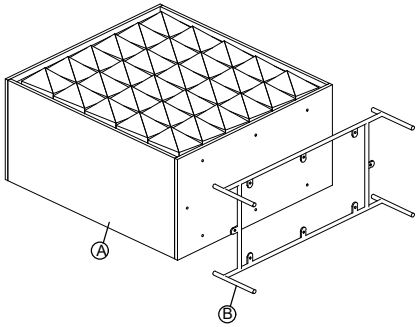

2

Place the flat washers (HW2) on the Allen bolts (HW1). Use the Allen Key (HW3) to screw in the Allen bolts (HW1) with the washers (HW2).

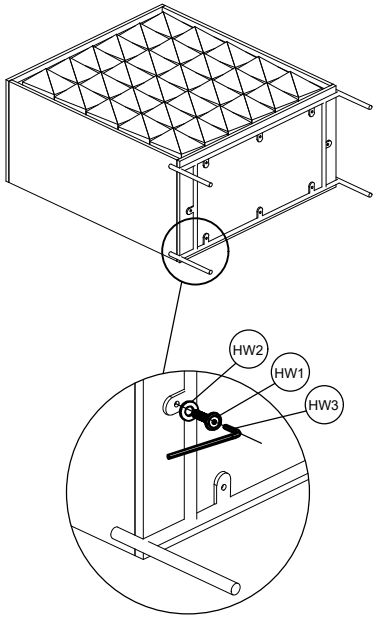

3

Flip the cabinet upright with help of another person.

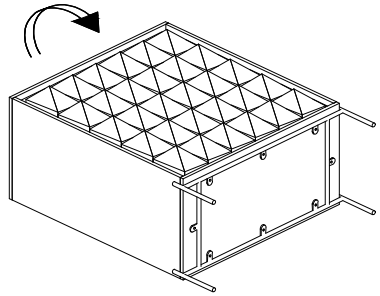

4

Place the cabinet in the position where you will use it.

We'd love to see it - just tag us (we're @safavieh) and use the hashtag #safavieh on Instagram!

