FINLEY
2 DRAWER
WOOD DESK

DESIGN # SFV5793A

Assembly Instructions

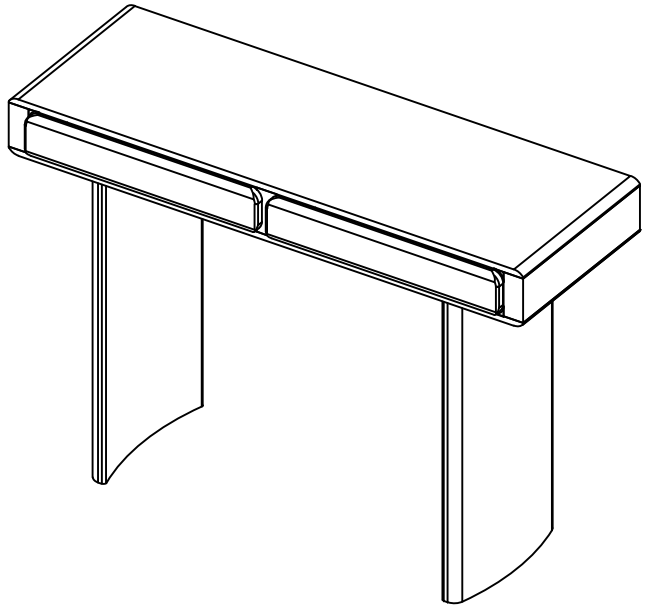

Need help?
Feel free to contact us via email or call
if you have any specific questions!

contact us:
cs@safavieh.com
866-422-9070

SAFAVIEH
COUTURE

Thanks for bringing Safavieh Couture into your home

Everything we make is incredibly simple to set up, including your desk. you won't need any additional tools.

Parts List

A x 1
DESK



B x 2
LEG

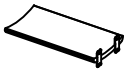

Hardware List

HW1 x 16
Allen bolt 16x6MM



HW2 x 16
Flat washer 16x8MM



HW3 x 1
Allen Key 4MM



1

Place the Table Top (A) upside down on a soft and clean surface. Align the screw holes on the Legs (B) to the screw holes on the bottom of the Table Top (A).

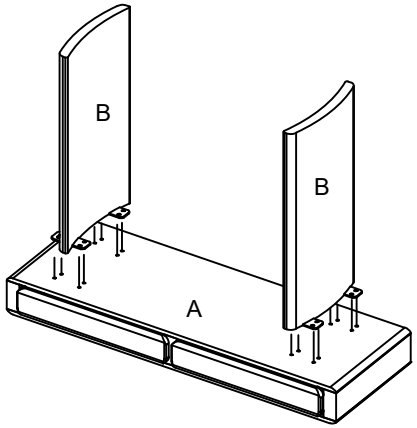

2

Place the Flat Washers (HW2) on the Allen Bolts (HW1). Attach the Legs (B) to the Table Top (A) by using the Allen Key (HW3) to screw in the Allen Bolts (HW1) with the Washers (HW2).

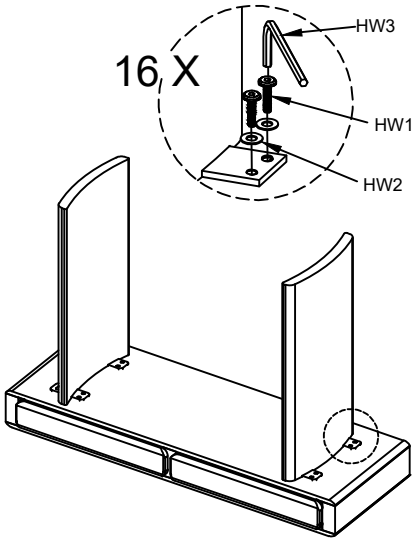

3

Flip the assembled console table upright with the help of another person.

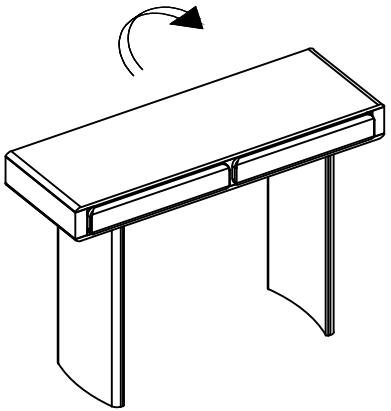

4

Place the desk in the place where you will use it.

We'd love to see it - just tag us (we're @safavieh) and use the hashtag #safavieh on Instagram

