MALLIKA CHANNEL TUFTED KING BED

DESIGN # SFV6117-K

Assembly instructions

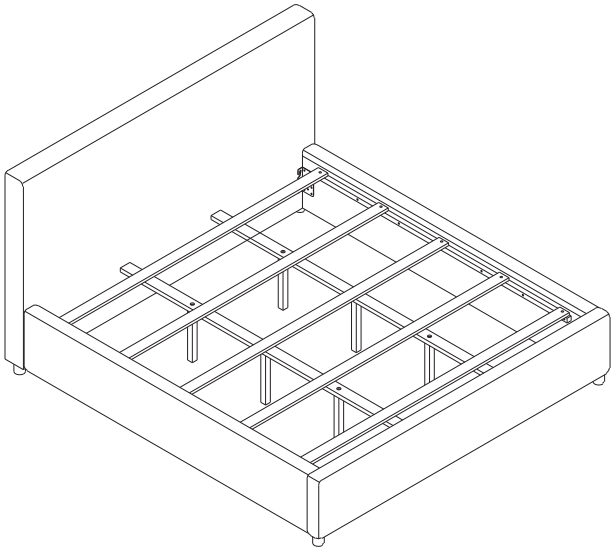

Need help?
Feel free to contact us via email or call if you have any specific questions!
contact us:
cs@safavieh.com
866-422-9070

SAFAVIEH
COUTURE

Thanks for bringing Safavieh couture into your home

Everything we make is incredibly simple to set up, including your new bed. You won't need any additional tools.

Parts List

A x 1
HEADBOARD

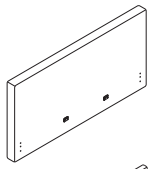

B x 1
FOOTBOARD

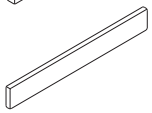

C x 1
SIDE RAIL (LEFT)

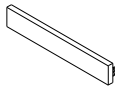

D x 1
SIDE RAIL (RIGHT)

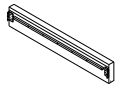

E x 2
CENTER SUPPORT RAIL

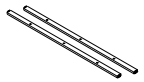

F x 6
CENTER LEG

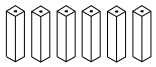

G x 4
LEG



H x 5
SLATS



Hardware List

HW1 x 18
Bolt 8mm x 38mm

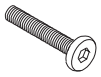

HW2 x 12
Spring Washer 8mm



HW3 x 18
Flat Washer 8mm



HW4 x 10
Screw M4 x 35mm



HW5 x 8
Screw M4 x 20mm



HW6 x 1
Allen Key M5



1

Attach the Legs (G) to the Headboard (A) and Footboard (B) by screwing them in a clockwise direction.

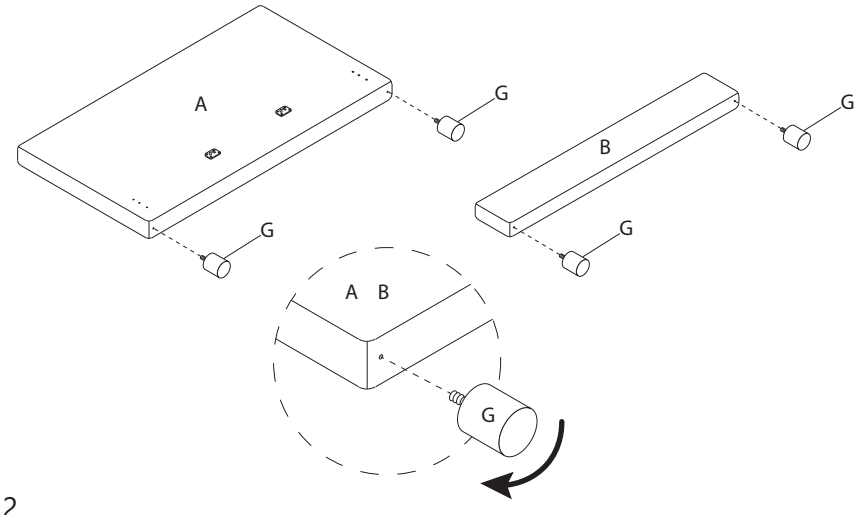

2

Align the screw holes on the 2 Side Rails (C & D) to the screw holes on the Headboard (A) and Footboard (B). Place the Spring Washer (HW2) and Flat Washer (HW3) on the Bolt (HW1) in the order shown below. Attach the Side Rails (C & D) by using the Allen Key (HW6) to screw in 12 of the Bolts (HW1) with the washers.

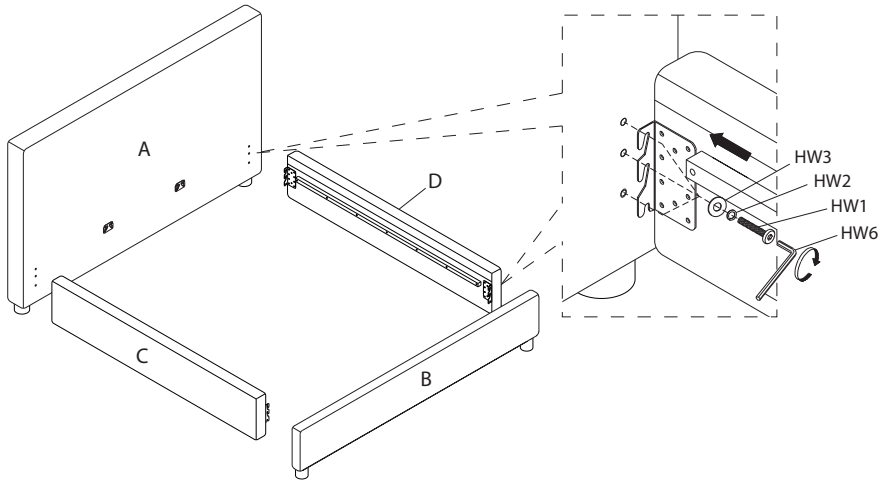

3

Align the screw holes on the Center Legs (F) to the screw holes on the Center Support Rails (E). Place the Flat Washer (HW3) on the Bolt (HW1). Attach the Center Legs (F) to the Center Support Rails (E) by using the Allen Key (HW6) to screw in 6 of the Bolts (HW1) with the washers.

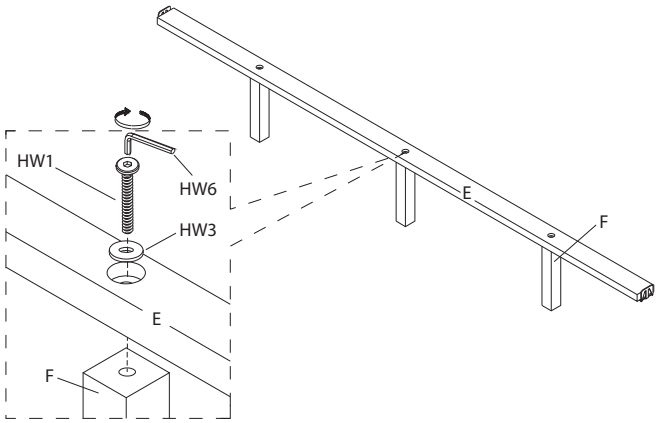

4

Attach the Center Support Rails (E) to the inside of the Headboard (A) and Footboard (B) by using a Philips Head Screwdriver (not included) to screw in the Screws (HW5) as shown below.

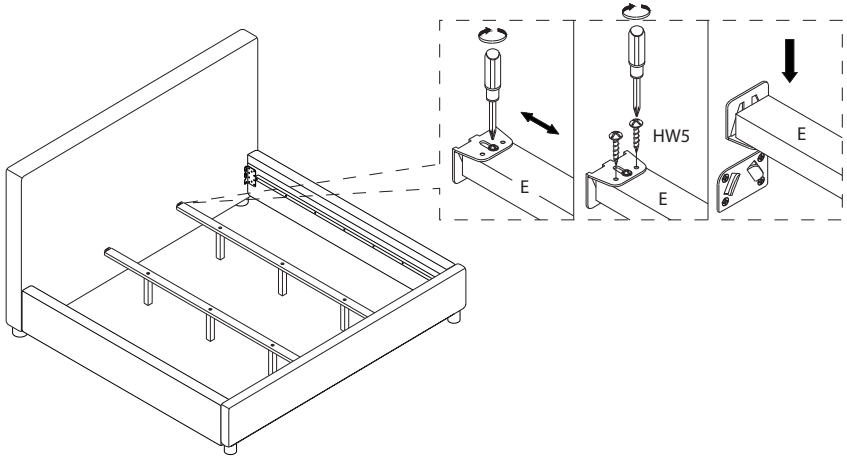

5

Place the Slats (H) evenly inside the bed frame. Attach the Slats (H) to the Side Rails (C & D) by using a Philips Head Screwdriver (not included) to screw in the Screws (HW4) as shown below.

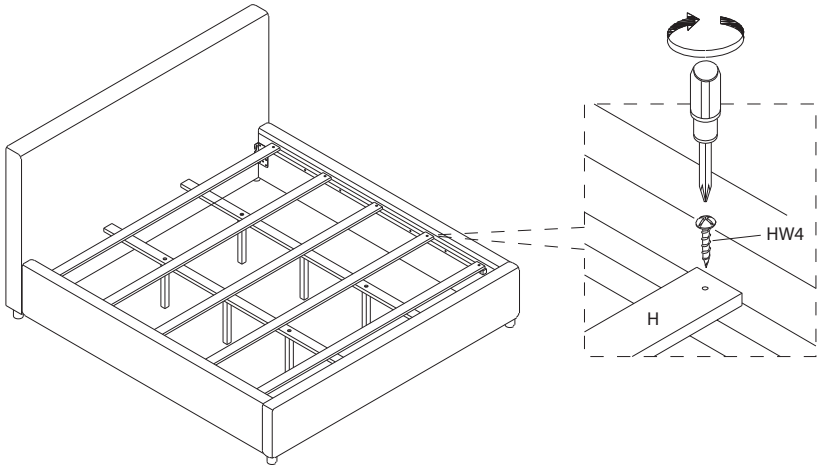

6

Place the bed in the place where you will use it. We'd love to see it - just tag us (we're @safavieh) and use the hashtag #safavieh on Instagram!

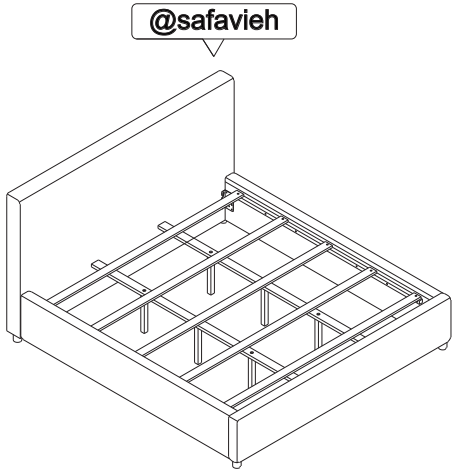

MALLIKA CHANNEL TUFTED QUEEN BED

DESIGN # SFV6117-Q

Assembly instructions

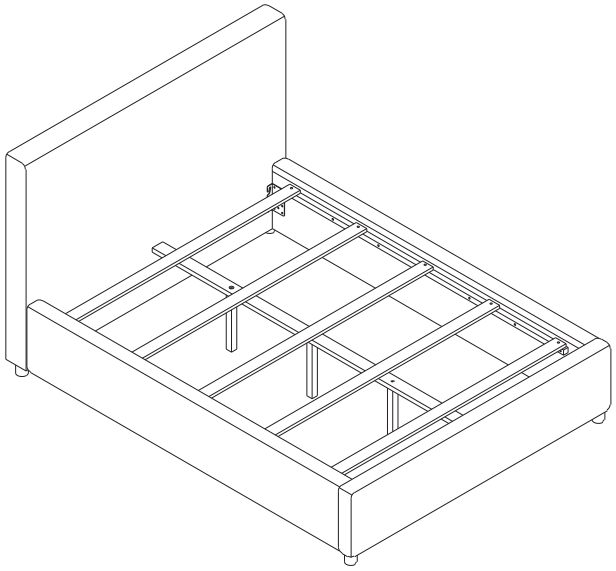

SAFAVIEH
COUTURE

Need help?
Feel free to contact us via email or call
if you have any specific questions!
contact us:
cs@safavieh.com
866-422-9070

Thanks for bringing Safavieh couture into your home

Everything we make is incredibly simple to set up, including your new bed. You won't need any additional tools.

Parts List

A x 1
HEADBOARD

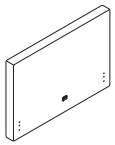

B x 1
FOOTBOARD

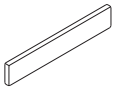

C x 1
SIDE RAIL (LEFT)

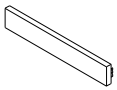

D x 1
SIDE RAIL (RIGHT)

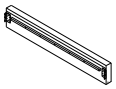

E x 1
CENTER SUPPORT RAIL



F x 3
CENTER LEG



G x 4
LEG



H x 5
SLATS



Hardware List

HW1 x 15
Bolt 8mm x 38mm

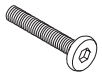

HW2 x 12
Spring Washer 8mm



HW3 x 15
Flat Washer 8mm



HW4 x 10
Screw M4 x 35mm



HW5 x 4
Screw M4 x 20mm



HW6 x 1
Allen Key M5



1

Attach the Legs (G) to the Headboard (A) and Footboard (B) by screwing them in a clockwise direction.

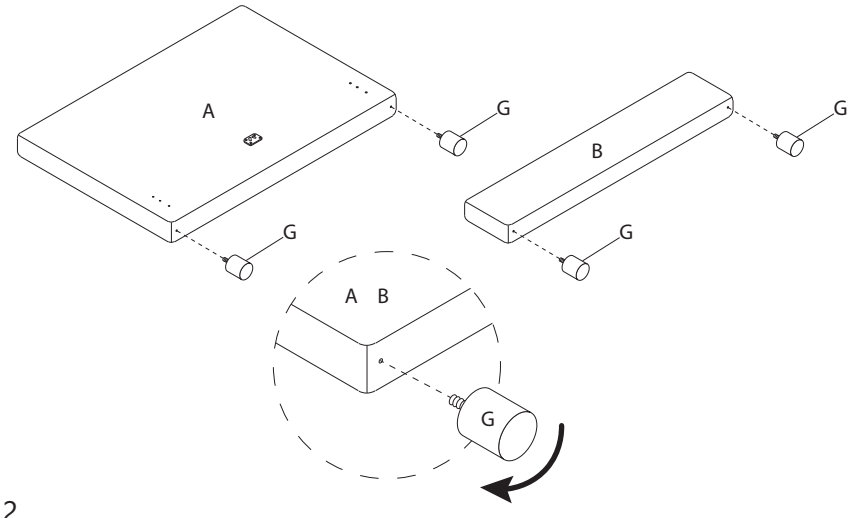

2

Align the screw holes on the 2 Side Rails (C & D) to the screw holes on the Headboard (A) and Footboard (B). Place the Spring Washer (HW2) and Flat Washer (HW3) on the Bolt (HW1) in the order shown below. Attach the Side Rails (C & D) by using the Allen Key (HW6) to screw in 12 of the Bolts (HW1) with the washers.

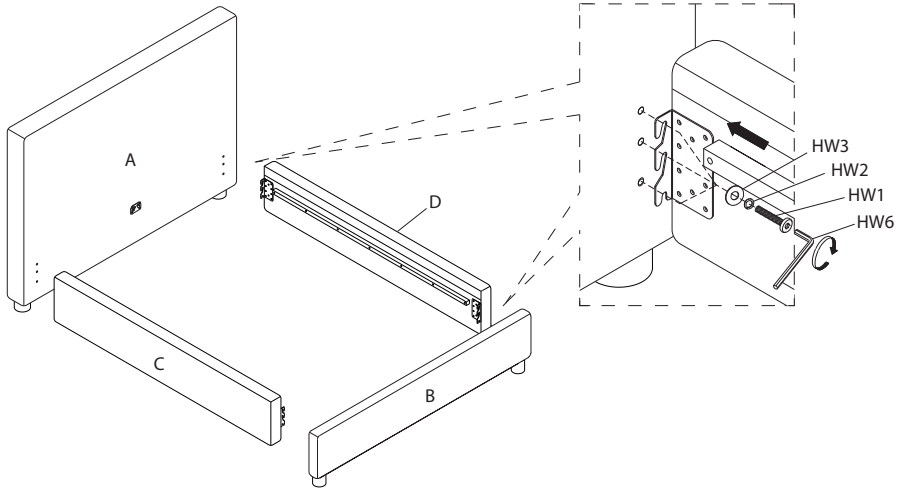

3

Align the screw holes on the Center Legs (F) to the screw holes on the Center Support Rails (E). Place the Flat Washer (HW3) on the Bolt (HW1). Attach the Center Legs (F) to the Center Support Rails (E) by using the Allen Key (HW6) to screw in 3 of the Bolts (HW1) with the washers.

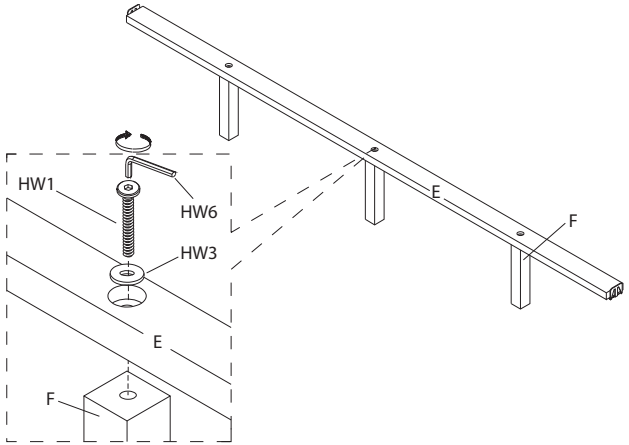

4

Attach the Center Support Rails (E) to the inside of the Headboard (A) and Footboard (B) by using a Philips Head Screwdriver (not included) to screw in the Screws (HW5) as shown below.

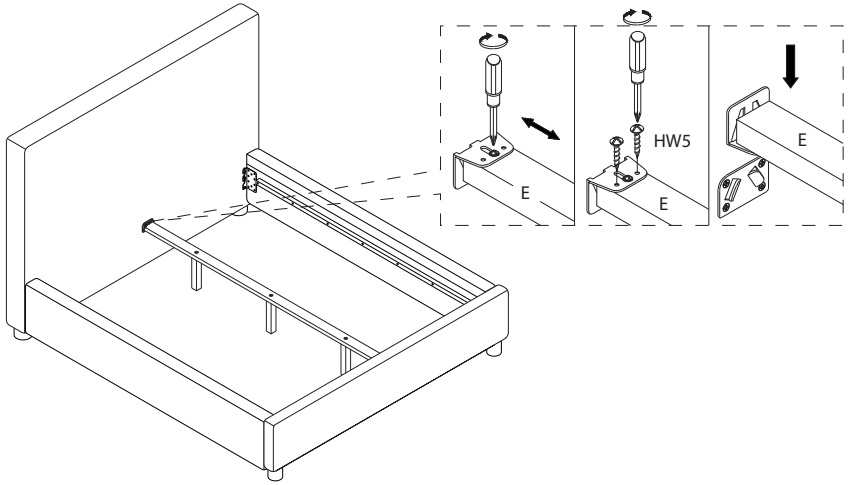

5

Place the Slats (H) evenly inside the bed frame. Attach the Slats (H) to the Side Rails (C & D) by using a Philips Head Screwdriver (not included) to screw in the Screws (HW4) as shown below.

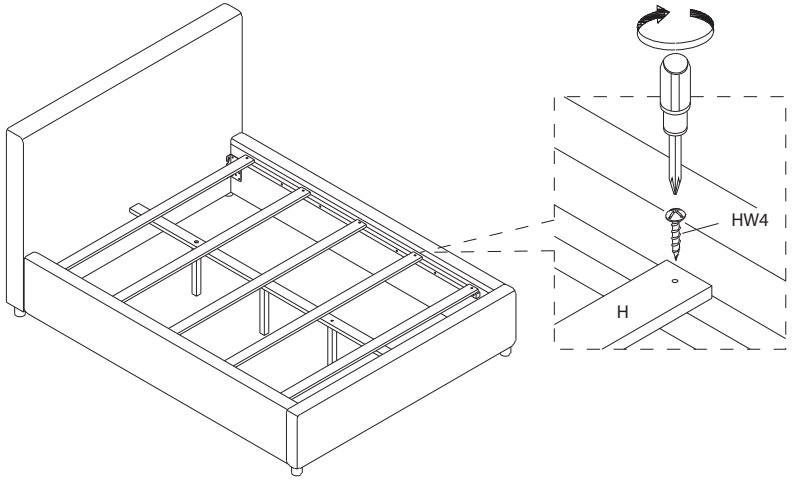

6

Place the bed in the place where you will use it. We'd love to see it - just tag us (we're @safavieh) and use the hashtag #safavieh on Instagram!

