PATTY 6 DRAWER DRESSER

DESIGN # SFV7206

Assembly Instructions

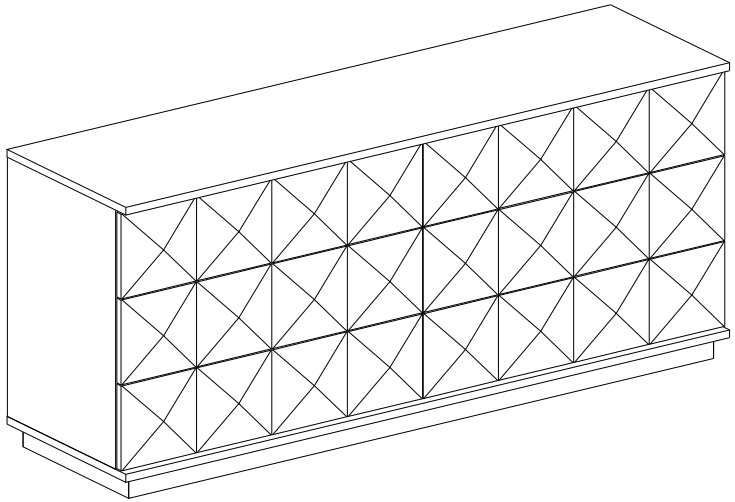

Need help?
Feel free to contact us via email or call
if you have any specific questions !
contact us:
cs@safavieh.com
866-422-9070

SAFAVIEH
COUTURE

Thanks for bringing Safavieh Couture into your home

Every thing we make is incredibly simple to set up, including your new cabinet.You won't need any tools.

Parts List

A x 1
BODY

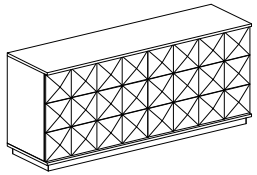

Hardware List

HW1 x 2
STEEL CABLE



HW2 x 2
SHORT SCREW 4x15mm



HW3 x 2
LONG SCREW 4x50mm



HW4 x 4
METAL BRACKET



1

Push the doors on the body (A) to open them

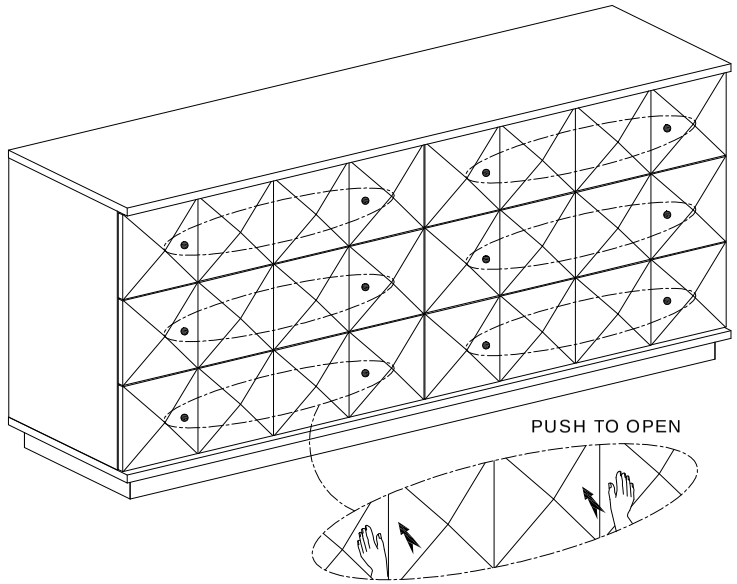

2

Adjust the levelers on the bottom of the legs as needed to make the product level.

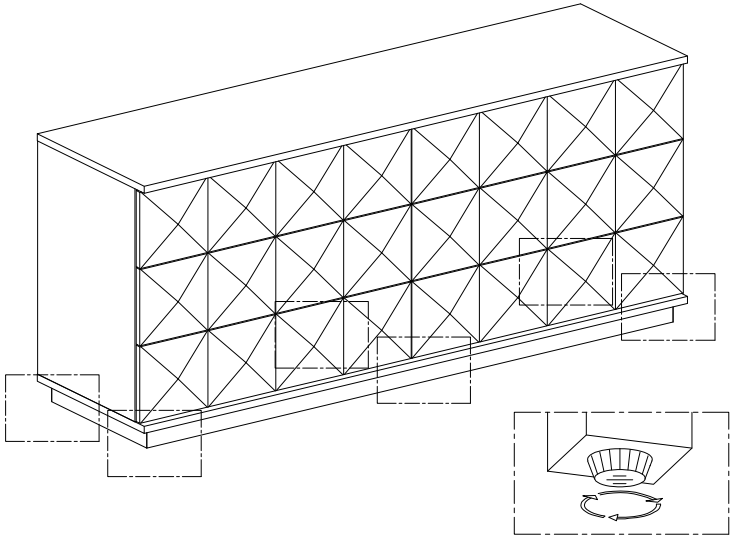

Serious or fatal crushing injuiries can occur from furniture tipover. To prevent tipover:
- Install tipover restraint provided.
- Place heaviest items in the lower drawers.
- Unless specifically designed to accommodate, do not set TVs or other heavy objects on top of this product.
- Never allow children to climb or hang on drawers, doors or shelves.
- Never open more than one drawer at a time.
- Do not defeat or remove the drawer interlock system.
- Use of tipover restraints may only reduce, but not eliminate, the risk of tip over.

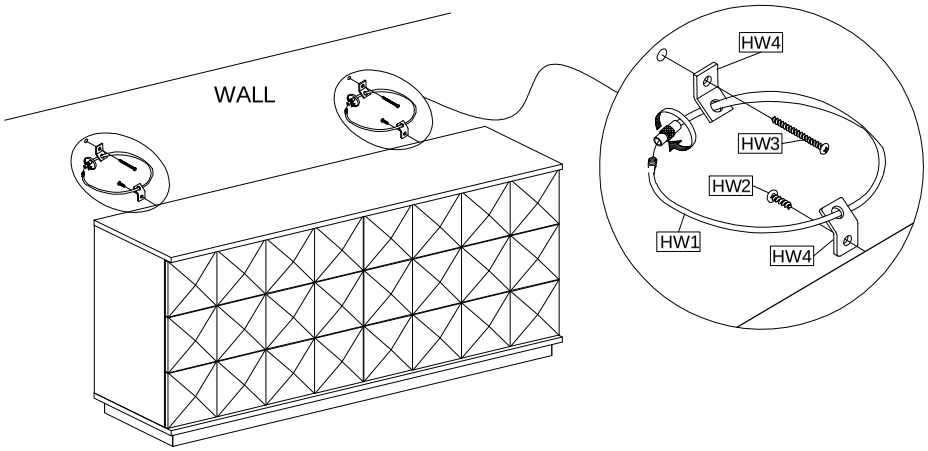

Assembly Steps:

I. Attach one mounting bracket "HW4" and secure to the back top edge of the furniture using the short screw "HW2".
II. Mark the location on the wall for mounting the second bracket "HW4". Secure the bracket on the wall using the long screw "HW3".
III. Place the furniture so the bracket on the back edge of unit is lined with the bracket on the wall.
IV. Loop the cable "HW1" through each bracket "HW4". Secure the cable "HW1" by connecting the two ends and turning the larger barrel end until it stops.
V. Check to make sure the steel cable is securely laced and locked to the brackets.
VI. Complete!

Place the dresser in the place where you will use it. We'd love to see it – just tag us (we're @safavieh) and use the hashtag #safavieh on Instagram!

