PATTY 2 DOOR WOOD MEDIA STAND

DESIGN # SFV7251

Assembly Instructions

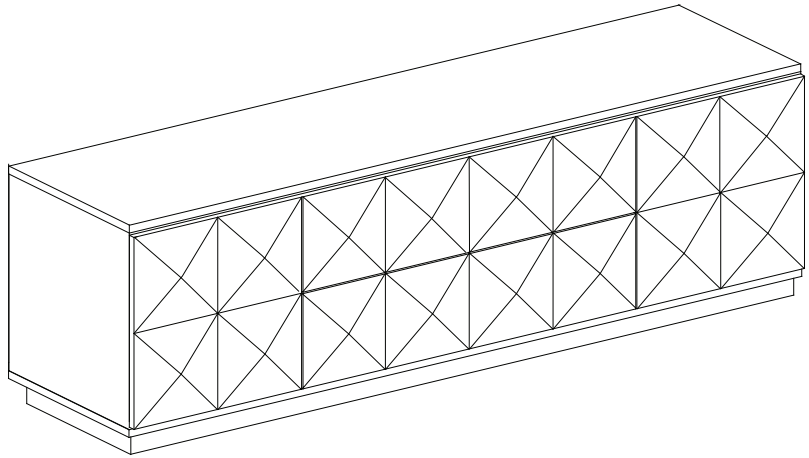

Need help?
Feel free to contact us via email or call if you have any specific questions!
contact us:
cs@safavieh.com
866-422-9070

SAFAVIEH COUTURE

Thanks for bringing Safavieh Couture into your home

Every thing we make is incredibly simple to set up, including your new TV cabinet.You won't need any additional tools.

Parts List

A x 1
BODY

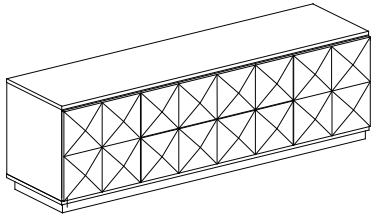

B x 2
SHELF

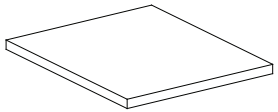

1

Push the doors to open them.

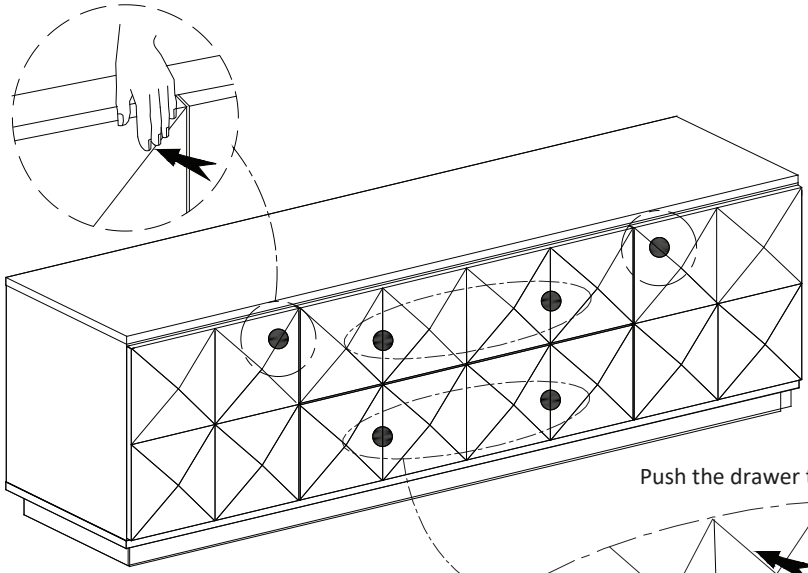

Push the drawer to open them.

2

Insert the shelves (B) into the body (A) making sure the shelves rest evenly on the shelf pins as shown.

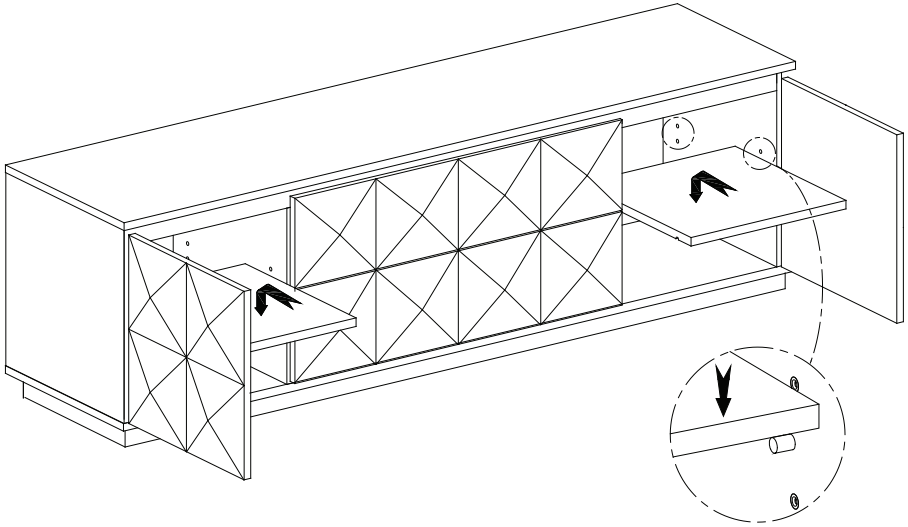

3

Adjust the levelers on the bottom of the legs as needed to make the product level.

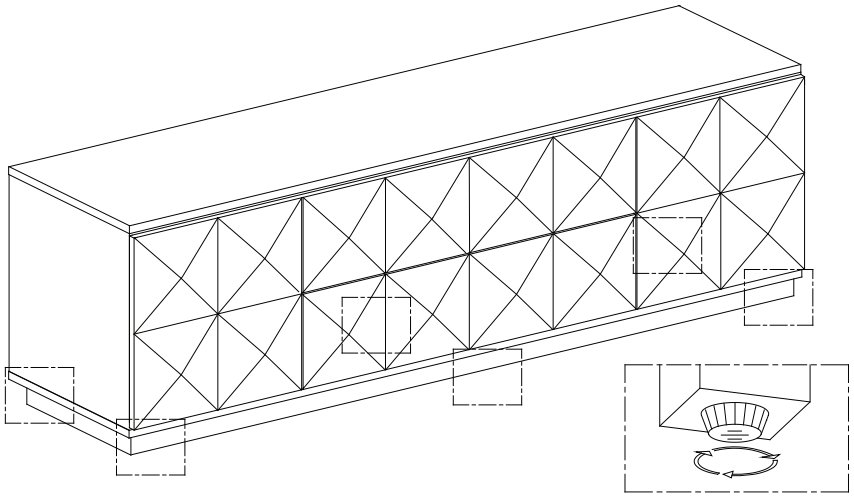

4

Place the TV cabinet in the place where you will use it. We'd love to see it – just tag us (we're @safavieh) and use the hashtag #safavieh on Instagram!

