SAFAVIEH
COUTURE

ITEM ID : SFV9733
PRODUCT DIMENSION : 35"WX35"DX15"H

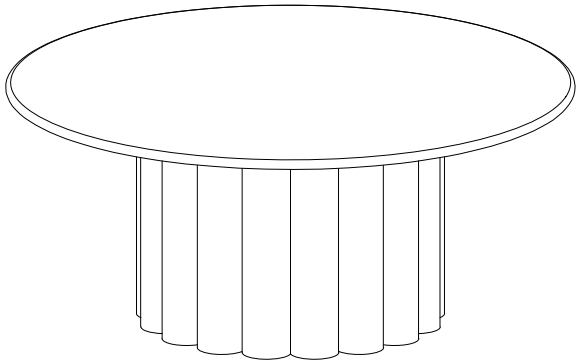

NOTICE

* Please make sure that you have all parts indicated and they are in good condition before you begin assembly of this item. Refer to part list and hardware list below for guidance.
* This item should be assembled on a soft surface to prevent scratching the finish during assembly.
* This item may require periodic tightening.
* If you are having difficulty, our friendly Customer Care team is always here to help. Please email **customersupport@safavieh.com**

PREPARATION

* Before beginning assembly of product, make sure all parts are present. Compare parts with part contents list and hardware contents list.
* If any part is missing or damaged, do not attempt to assemble the product.
* Estimated Assembly Time: 30 minutes.
* Require 2-3 person for assembly.
* Tools Required for Assembly (included): Allen Key

CARE AND MAINTENANCE

- Blot up spills immediately, always use coasters on table tops under beverages. Use trivets or mats under hot dishes or cookware. Clean with warm water and dry surface immediately after cleaning. Do not use cleaners that contain acid such as bathroom cleaners, grout cleaner, and tile cleaners. Do not use abrasive cleaner in either dry or liquid forms. Use a cleaner and polish formulated for marble surfaces.
- Always use felt pads under all articles to prevent discoloration or softening of the lacquer. Plastic and rubber bases on items can discolor wood. Wipe up spills immediately and avoid common hazards such as hot dishes, harsh solvents and abrasives. Cleaning should be done with a soft lint free cotton cloth dampened with water or furniture polish. On highly used surfaces we recommend applying a quality paste wax which should be used on a regular basis to provide additional protection from scratches and spills. How often you apply the wax depends on how much wear the furniture receives.

PARTS & HARDWARE LIST

Piece	Description	Picture	Quantity	carton call
A	Marble Top		1x	1 of 2
B	Assembly plate		4x	1 of 2
C	Base		1x	2 of 2
HW1	CSK Bolt 8x1.25x20mm		4x	1 of 2
HW2	Allen key 5mm		1x	1 of 2
HW3	JCB Bolt 8x1.25x16mm		4x	1 of 2
HW4	Flat Washer 8 mm		4x	1 of 2

⚠WARNING⚠

Weight Capacity : 100 lbs
WARNING : DO NOT STAND/SIT ON COFFEE TABLE
WARNING : DO NOT DRAG COFFEE TABLE
WARNING : HEAVY PRODUCT
WARNING : DO NOT OVER TORQUE BOLTS

PREPARATION

* Before beginning assembly of product, make sure all parts are present. Compare parts with part contents list and hardware contents list.
* If any part is missing or damaged, do not attempt to assemble the product.
* Estimated Assembly Time: 30 minutes.
* Tools Required for Assembly (included): Allen Key
* If you are having difficulty, our friendly Customer Care team is always here to help. Please email **customersupport@safavieh.com**

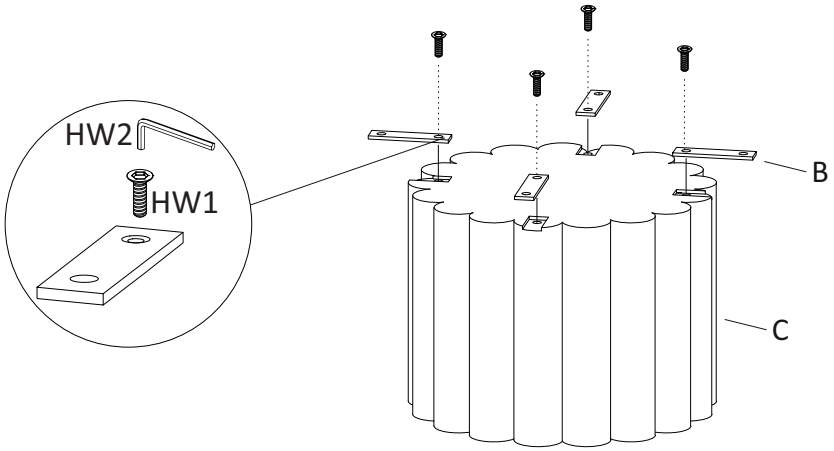

STEP 1: Put the base (C) on a flat surface. Align the screw holes on the assembly plate (B) to the base (C). Use the Allen key (HW2) to screw in the bolts (Hw1) as shown in the picture.

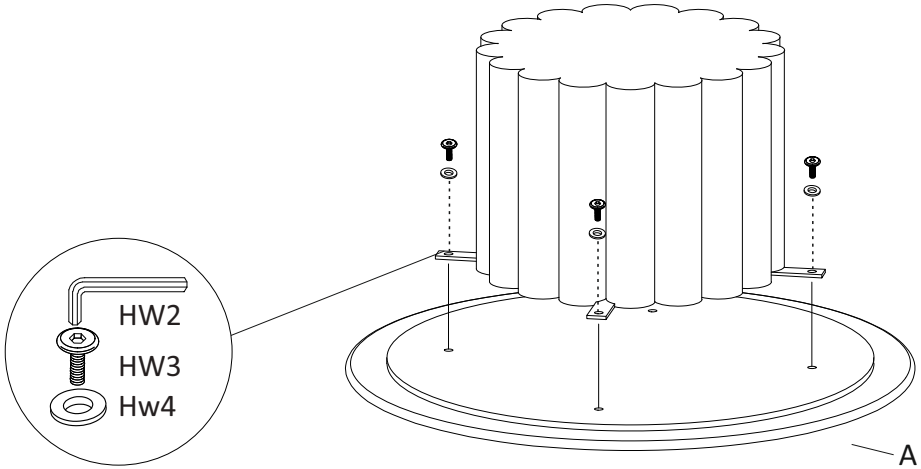

STEP 2: Carefully place the marble top (A) upside down on a flat and soft surface. Carefully align the screw holes on the assembled base to the screw holes on the top (A). Place the washers (HW4) on the bolts (HW3) and use the Allen key (Hw2) to screw in the bolts.

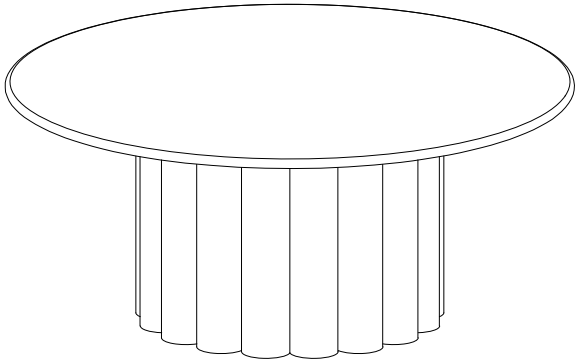

STEP 3: Turn the table upright. Your product is now ready for use.